宇竑智能科技
YU HONG INTELLIGENT TECHNOLOGY

工业镜头手册

YU HONG
INDUSTRIAL LENS MANUAL

走进

宇竑智能

宇竑（深圳）智能科技有限公司

团队核心人员专业从事机器视觉行业十年以上。

核心业务是机器视觉项目的集成，研发，设计

及销售工业相机，工业镜头、工业光源、视觉软件等机器视觉相关产品，

是以技术为核心的专业化企业。

我们以“方案+服务”立足，

“为工程师助力”为口号，

"为客户解决实际问题"为服务宗旨，

为推动机器视觉行业的发展贡献我们的力量，

不负众望，砥砺德行！

宇竑智能科技

YU HONG INTELLIGENT TECHNOLOGY

目录

工业FA镜头系列

1/1.8"　5MP

500 万像素，适用于 200 万，300 万，500 万相机
固定光圈，手动可调光圈可选
TV 畸变小于 0.1%
焦距涵盖 4-75mm
体积小，超紧凑型设计
高对比度工业 FA 镜头

型号 Model No	焦距 EFL	通光孔径 F/NO	最大像面尺寸 Image Size(Dia)	视场角 Field of View Angle			TV 畸变 Distortion(TV)	最近工作距离 MOD	滤镜螺纹 Filter Size	镜头接口 Mount
				1/1.8”	1/2.5”	1/3”	1/1.8”			
CFA04118-5C	4mm	2.0-C	1/1.8"	82.9° ×66.5°	70.7° ×56.7°	61.1° ×47.5°	< 0.5%	0.1m、0.037X	/	C-Mount
CFA06118-5C	6mm	2.0-C	1/1.8"	59.6° ×46°	48.7° ×36.5°	41.9° ×31.4°	< 0.1%	0.1m、0.058X	M25.5×P0.5	C-Mount
CFA08118-5C	8mm	2.0-C	1/1.8"	46.8° ×36°	38.2° ×29.11°	32.2° ×24.5°	< 0.1%	0.1m、0.076X	M25.5×P0.5	C-Mount
CFA12118-5C	12mm	2.0-C	1/1.8"	33° ×24.3°	27.2° ×20.7°	22.9° ×17.6°	< 0.3%	0.1m、0.113X	M25.5×P0.5	C-Mount
CFA16118-5C	16mm	2.0-C	1/1.8"	24.7° ×18.2°	20.6° ×15.8°	17.4° ×13.5°	< 0.1%	0.1m、0.162X	M25.5×P0.5	C-Mount
CFA25118-5C	25mm	2.0-C	1/1.8"	13.6° ×11.3°	13.4° ×10.3°	11.4° ×8.8°	< 0.1%	0.1m、0.296X	M25.5×P0.5	C-Mount
CFA35118-5C	35mm	2.0-C	1/1.8"	11.8° ×8.7°	9.4° ×7.1°	7.9° ×5.9°	< 0.1%	0.2m、0.193X	M25.5×P0.5	C-Mount
CFA50118-5C	50mm	2.8-22	1/1.8"	8.2° ×6.1°	6.6° ×4.9°	5.5° ×4.1°	< 0.05%	0.3m、0.196X	M28.5×P0.5	C-Mount
CFA75118-5C	75mm	2.8-22	1/1.8"	5.4° ×4.04°	4.4° ×3.3°	3.66° ×2.75°	< 0.05%	0.5m、0.178X	M30.5×P0.5	C-Mount

CFA04118-5C

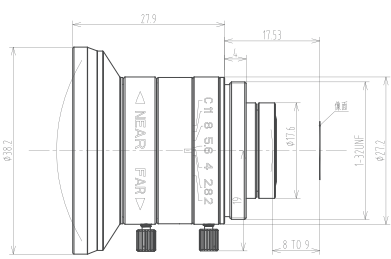

CFA06118-5C

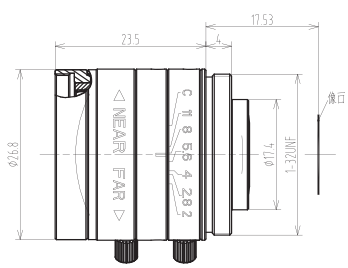

CFA08118-5C

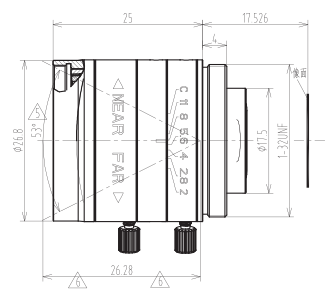

CFA12118-5C

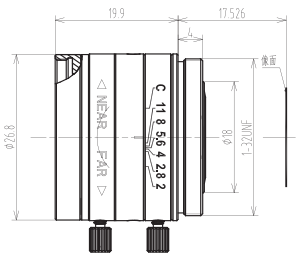

CFA16118-5C

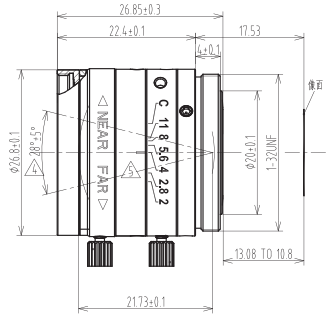

CFA25118-5C

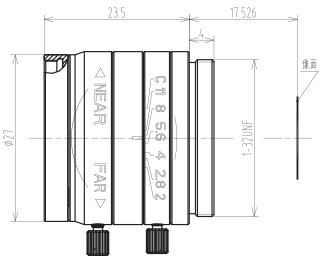

CFA35118-5C

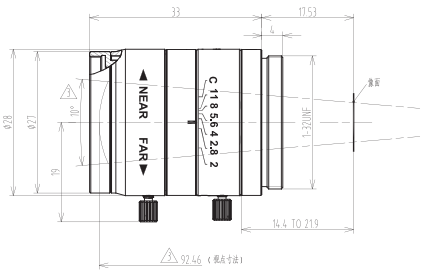

CFA50118-5C

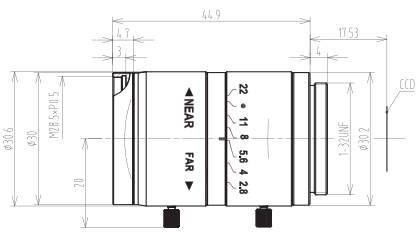

CFA75118-5C

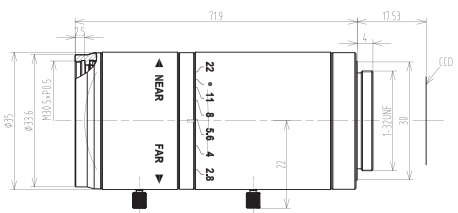

工业FA镜头系列

1/1.7"　12MP

超高成像质量
适用于像元 1.85um 相机，最高可达 1200 万像素
匹配 IMX226 芯片（1/1.7" 12MP）
焦距覆盖 6-50mm
体积小，超紧凑型设计

型号 Model No	焦距 EFL	通光孔径 F/NO	最大像面尺寸 Image Size(Dia)	视场角 Field of View Angle			TV 畸变 Distortion(TV)	最近工作距离 MOD	滤镜螺纹 Filter Size	镜头接口 Mount
				1/1.7"	1/1.8"	1/2"	1/1.7"			
CFA06117-12C	6mm	2.4-16	1/1.7"	64.51° ×45.67°	61.28° ×47.12°	53.76° ×38.06°	< 0.73%	0.1m、0.054X	/	C-Mount
CFA08117-12C	8mm	2.4-16	1/1.7"	51.33° ×35.34°	48.49° ×36.68°	42.78° ×29.45°	< -0.67%	0.1m、0.07X	M25.5×P0.5	C-Mount
CFA12117-12C	12mm	2.4-16	1/1.7"	34.89° ×23.81°	32.87° ×24.50°	29.08° ×19.84°	< 0.15%	0.1m、0.106X	M25.5×P0.5	C-Mount
CFA16117-12C	16mm	2.4-16	1/1.7"	26.06° ×17.6°	24.51° ×18.17°	21.72° ×14.67°	< -0.02%	0.1m、0.138X	M25.5×P0.5	C-Mount
CFA25117-12C	25mm	2.4-16	1/1.7"	16.84° ×11.29°	15.82° ×11.68°	14.03° ×9.41°	< -0.01%	0.1m、0.284X	M25.5×P0.5	C-Mount
CFA35117-12C	35mm	2.4-16	1/1.7"	11.48° ×7.64°	10.78° ×7.94°	9.57° ×6.37°	< 0.01%	0.15m、0.279X	M25.5×P0.5	C-Mount
CFA50117-12C	50mm	2.4-16	1/1.7"	7.78° ×5.2°	7.31° ×5.38°	6.48° ×4.33°	< 0.03%	0.3m、0.192X	M25.5×P0.5	C-Mount

电子设备 / Electronics equipment

有无 / 辨别
检测电机线的捆扎不良和引线断裂
Identify existence / Identify classification
Detection of poor binding and broken leads of motor wires

CFA06117-12C

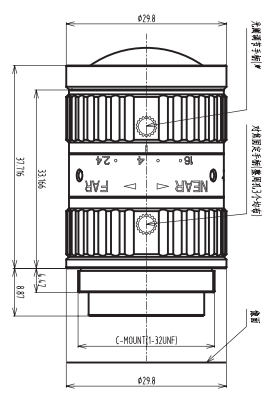

CFA08117-12C

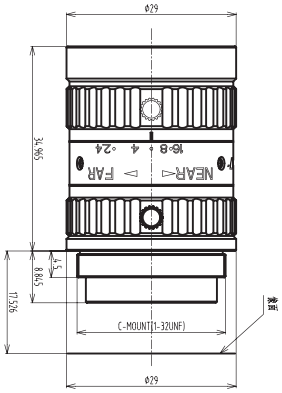

CFA12117-12C

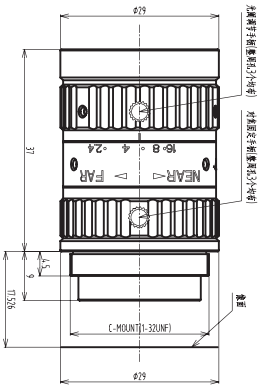

CFA16117-12C

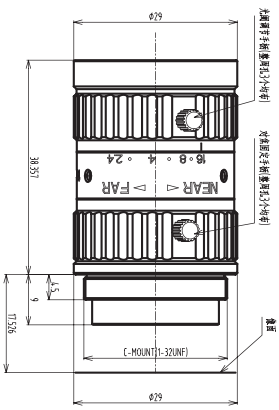

CFA25117-12C

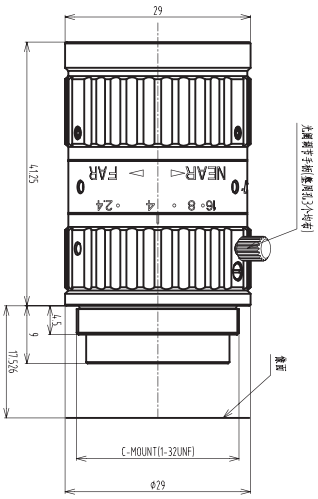

CFA35117-12C

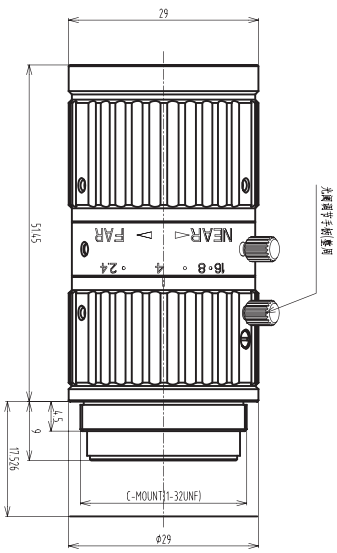

CFA50117-12C

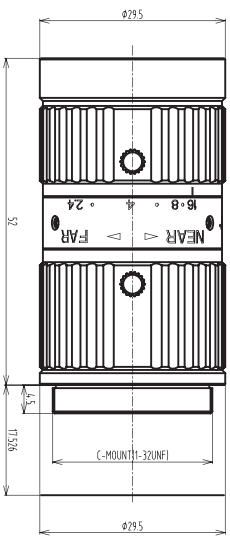

工业FA镜头系列

2/3"　　5MP

500 万像素，适用于 200 万 ,300 万，500 万相机
高相对照度，大通光孔径
对焦范围从 0.1m 到无穷远
F/NO 1.4-16 超大光圈，一致性好
高对比度画像

型号 Model No	焦距 EFL	通光孔径 F/NO	最大像面尺寸 Image Size(Dia)	视场角 Field of View Angle			TV 畸变 Distortion(TV)	最近工作距离 MOD	滤镜螺纹 Filter Size	镜头接口 Mount
				2/3"	1/2"	1/3"	2/3"			
CFA08023-5C	8mm	1.4-16	2/3"	56.3° ×43.7°	42.5° ×32.4°	30.7° ×23.8°	< 1%	0.1m、0.075X	M37×P0.5	C-Mount
CFA12023-5C	12mm	1.4-16	2/3"	39° ×30.3°	29.48° ×22.8°	21.3° ×16.5°	< -0.8%	0.15m、0.077X	M30.5×P0.5	C-Mount
CFA16023-5C	16mm	1.4-16	2/3"	30.3° ×23°	22.3° ×16.8°	16.8° ×12.6°	< 0.1%	0.1m、0.145X	M30.5×P0.5	C-Mount
CFA25023-5C	25mm	1.4-16	2/3"	20° ×15°	14.6° ×11°	11° ×8.2°	< 0.2%	0.1m、0.253X	M30.5×P0.5	C-Mount
CFA35023-5C	35mm	1.4-16	2/3"	13.9° ×10.4°	10.1° ×7.6°	7.6° ×5.7°	< -0.8%	0.15m、0.213X	M37×P0.5	C-Mount
CFA50023-5C	50mm	1.4-C	2/3"	10.46° ×7.86°	7.6° ×5.27°	5.7° ×4.3°	< -0.8%	0.3m、0.177X	M37×P0.5	C-Mount

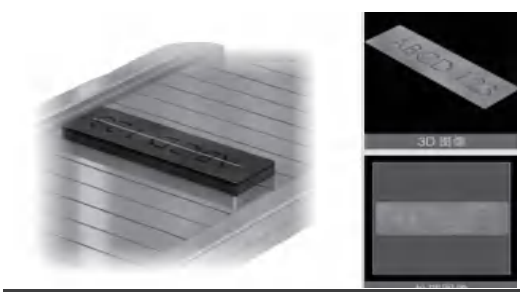

工业 / Industry

高度
检测金属的刻印

Height
Detect metal markings

工业 / Industry

位置 / 倾斜
金属模内的工作安装位置确认

Position/Obliqueness
Confirmation of the work piece mounting position in the mold

CFA08023-5C

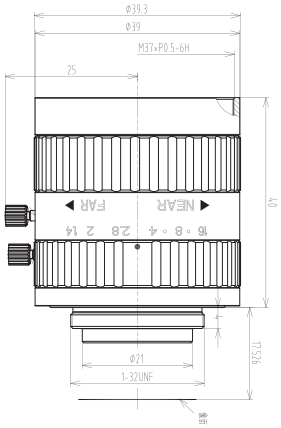

CFA12023-5C

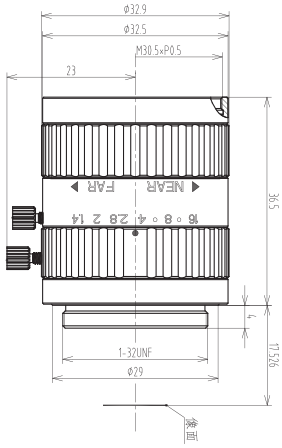

CFA16023-5C

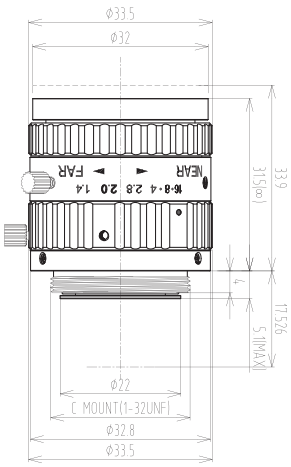

CFA25023-5C

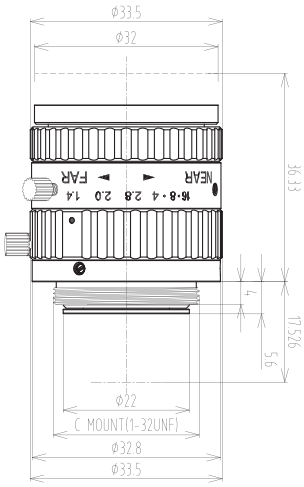

CFA35023-5C

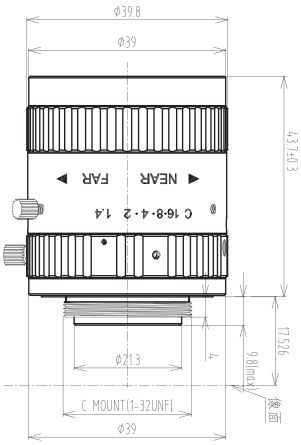

CFA50023-5C

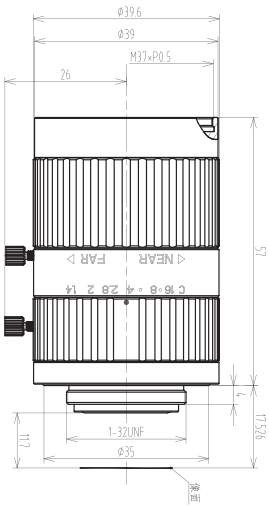

工业FA镜头系列

2/3"　　10MP

超高成像质量
适用于像元 2.4μ 相机，最高可达 1000 万像素
高相对照度，大通光孔径
聚焦范围从 0.1M 到无穷远
体积小，超紧凑型设计

型号 Model No	焦距 EFL	通光孔径 F/NO	最大像面尺寸 Image Size(Dia)	视场角 Field of View Angle			TV 畸变 Distortion(TV)	最近工作距离 MOD	滤镜螺纹 Filter Size	镜头接口 Mount
				2/3"	1/2"	1/3"	2/3"			
CFA08023-10C	8mm	2.8-16	2/3"	57.6° ×44°	42.8° ×32.7°	32.7° ×24.7°	< 1%	0.1m、0.074X	M30.5×P0.5	C-Mount
CFA12023-10C	12mm	2.8-16	2/3"	39.8° ×30.4°	29.5° ×22.3°	22.3° ×16.8°	< 0.2%	0.1m、0.109X	M27×P0.5	C-Mount
CFA16023-10C	16mm	2.8-16	2/3"	30.8° ×23.1°	22.6° ×17°	17.1° ×12.8°	< 0.1%	0.1m、0.15X	M27×P0.5	C-Mount
CFA25023-10C	25mm	2.8-16	2/3"	20° ×15.3°	14.9° ×11.4°	11.4° ×8.8°	< 0.1%	0.1m、0.246X	M27×P0.5	C-Mount
CFA35023-10C	35mm	2.8-16	2/3"	13.1° ×9.9°	9.5° ×7.2°	7.2° ×5.5°	< 0.1%	0.1m、0.347X	M27×P0.5	C-Mount
CFA50023-10C	50mm	2.8-16	2/3"	10.4° ×8.4°	8.2° ×7.2°	6.2° ×5.4°	< -0.1%	0.3m、0.188X	M27×P0.5	C-Mount

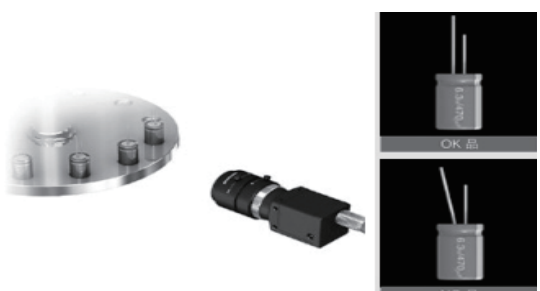

电子零件 / Electronic parts

位置 / 倾斜
检测电容器的导线不良

Position/ Tilt
Defective lead wire of the detection capacitor

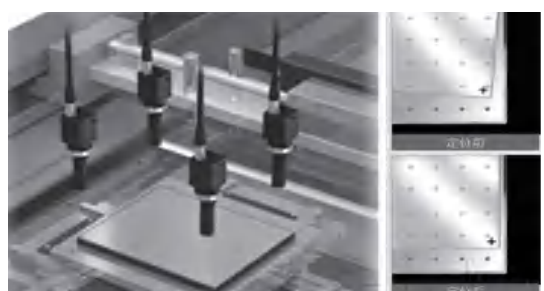

液晶、半导体、其他
Liquid crystal, semiconductor, others

位置 / 倾斜
玻璃电路板的定位

Position/Obliqueness
Positioning of glass circuit boards

CFA08023-10C

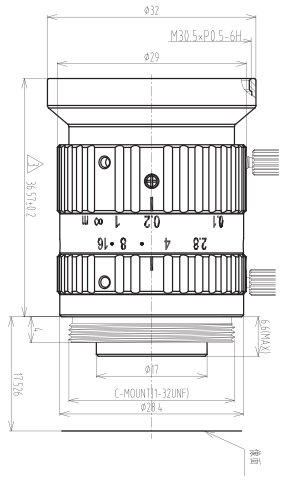

CFA12023-10C

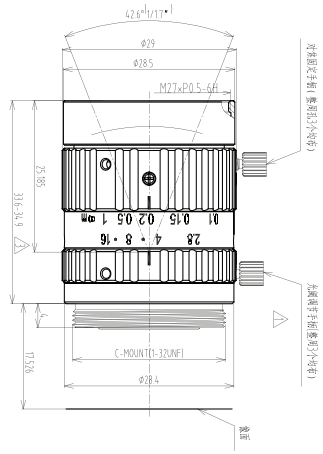

CFA16023-10C

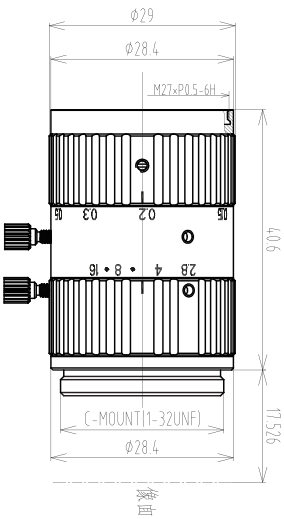

CFA25023-10C

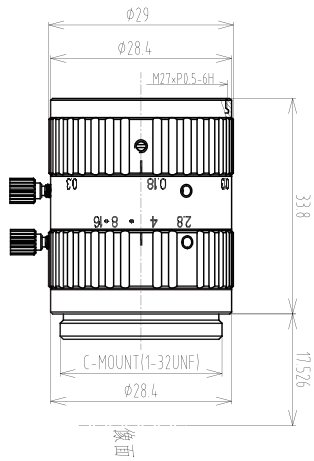

CFA35023-10C

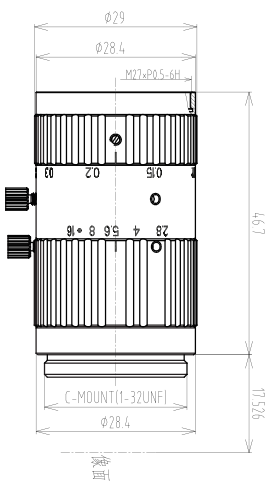

CFA50023-10C

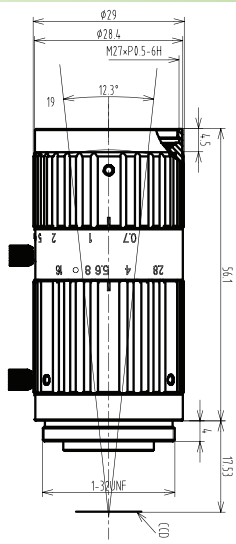

工业FA镜头系列

1"　　5MP

500 万像素，适用于 200 万、300 万、500 万
手动可调光圈，C 接口
高相对照度，大通光孔径
TV 畸变 < 0.1%
对焦范围从 0.1 m 到无穷远

型号 Model No	焦距 EFL	通光孔径 F/NO	最大像面尺寸 Image Size(Dia)	视场角 Field of View Angle			TV 畸变 Distor-tion(TV)	最近工作距离 MOD	滤镜螺纹 Filter Size	镜头接口 Mount
				1"	2/3"	1/2"				
CFA12001-5C	12.5mm	1.4-16	1"	54.5° ×42°	38.5° ×29.1°	28.8° ×21.7°	< 1.8%	0.1m、0.0106X	M46×P0.75	C-Mount
CFA16001-5C	16mm	1.4-16	1"	42.4° ×32.4°	29.9° ×22.7°	21.2° ×16.5°	< 0.2%	0.1m、0.146X	M46×P0.75	C-Mount
CFA25001-5C	25mm	1.4-16	1"	28.7° ×22.06°	20.34° ×15.78°	15.34° ×11.84°	< 0.1%	0.1m、0.27X	M40.5×P0.5	C-Mount
CFA35001-5C	35mm	1.4-16	1"	19.28° ×14.32°	13.14° ×9.8°	9.58° ×7.16°	< 0.1%	0.15m、0.244X	M46×P0.75	C-Mount
CFA50001-5C	50mm	1.4-16	1"	13.86° ×10.4°	9.56° ×7.16°	6.96° ×5.3°	< 0.1%	0.3m、0.163X	M46×P0.75	C-Mount
CFA75001-5C	75mm	1.8-16	1"	9.8° ×7.4°	6.74° ×5°	4.9° ×3.6°	< 0.1%	0.8m、0.115X	M55×P0.75	C-Mount

液晶、半导体、其他
Liquid crystal, semiconductor, others
计数
SD 卡数量计算

Counting
Calculation of the number of SD cards

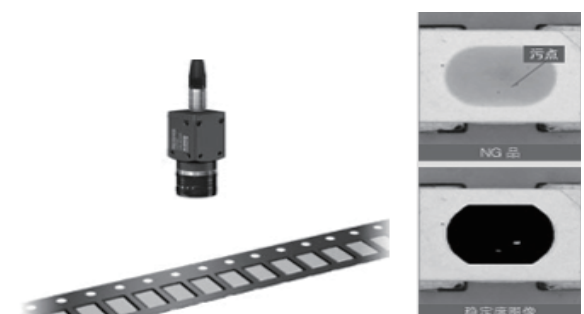

电子零件 / Electronic parts

瑕疵 / 污点
LED 外观检测

Defective/Spot
LED appearance inspection

CFA12001-5C

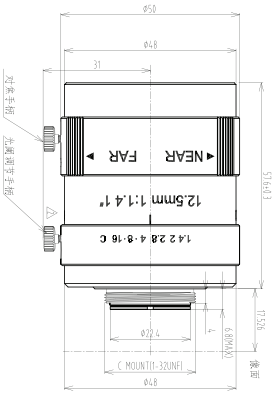

CFA16001-5C

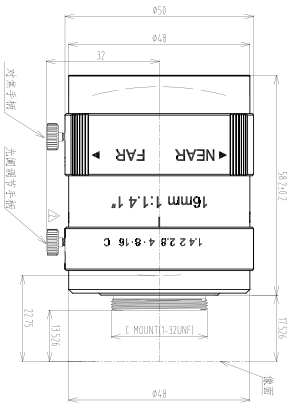

CFA25001-5C

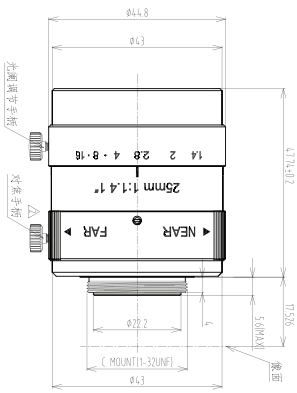

CFA35001-5C

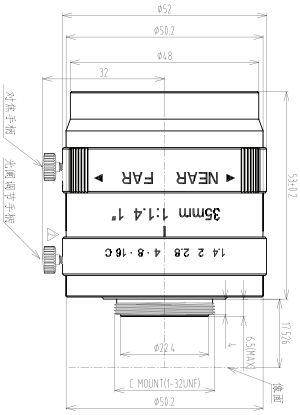

CFA50001-5C

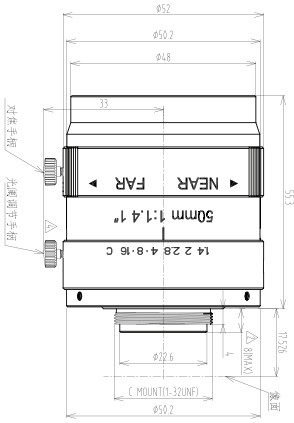

CFA75001-5C

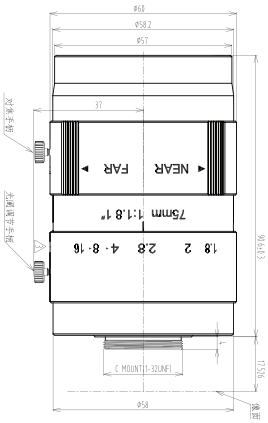

工业FA镜头系列

1.1"　　20MP

超高成像质量
支持 2000 万像素面阵相机
高相对照度 大通光孔径
畸变 < 0.1%
聚焦范围从 0.1m 到无穷远
兼容 1''、2/3" 芯片

型号 Model No	焦距 EFL	通光孔径 F/NO	最大像面尺寸 Image Size(Dia)	视场角 Field of View Angle			TV 畸变 Distortion(TV)	最近工作距离 MOD	滤镜螺纹 Filter Size	镜头接口 Mount
				1.1"	1"	2/3"	1.1"			
CFA06011-20C	6mm	1.8-16	1.1"	104.9° ×86.2°	95.4° ×78.4°	73.3° ×57.5°	< 2.5%	0.1m、0.0498X	/	C-Mount
CFA08011-20C	8mm	1.4-16	1.1"	84.8° ×68°	77.1° ×61.8°	57.6° ×44.9°	< 5.5%	0.1m、0.064X	M58×P0.75	C-Mount
CFA12011-20C	12mm	2.8-22	1.1"	57° ×45°	54.8° ×42.3°	38.9° ×29.6°	< 1.5%	0.1m、0.103X	/	C-Mount
CFA16011-20C	16mm	2.8-22	1.1"	46.3° ×36°	43.6° ×33.4°	30.8° ×23.3°	< 0.5%	0.1m、0.148X	M35.5×P0.5	C-Mount
CFA25011-20C	25mm	2.8-22	1.1"	30.4° ×23°	27.6° ×20.9°	19.2° ×14.5°	< 0.1%	0.1m、0.221X	M35.5×P0.5	C-Mount
CFA35011-20C	35mm	2.8-22	1.1"	22.6° ×17°	20.6° ×15.45°	14.3° ×10.7°	< 0.02%	0.2m、0.1805X	M35.5×P0.5	C-Mount
CFA50011-20C	50mm	2.8-22	1.1"	15.9° ×11.9°	14.6° ×10.9°	10.1° ×7.5°	< 0.04%	0.3m、0.179X	M35.5×P0.5	C-Mount

液晶、半导体、其他
Liquid crystal, semiconductor, others
几何测量
检测 IC 导线弯曲

Geometric measurement
Detects IC Lead Bending

CFA06011-20C

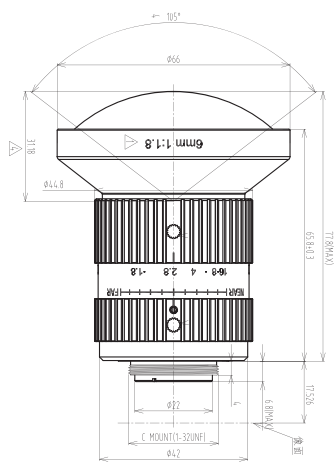

CFA08011-20C

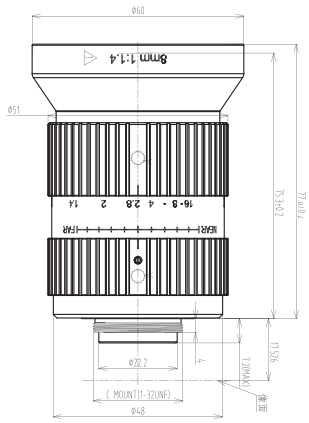

CFA12011-20C

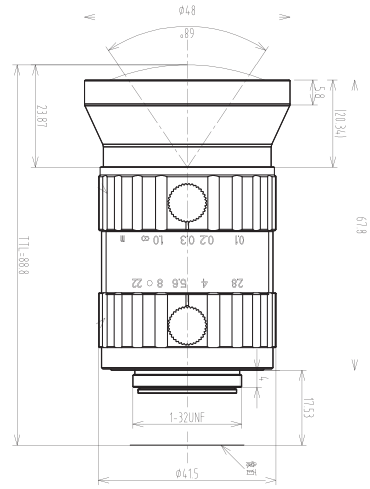

CFA16011-20C

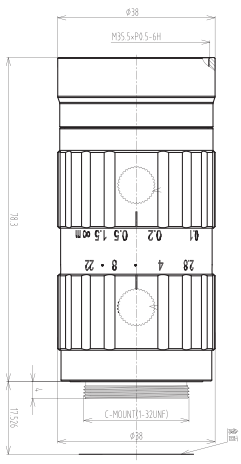

CFA25011-20C

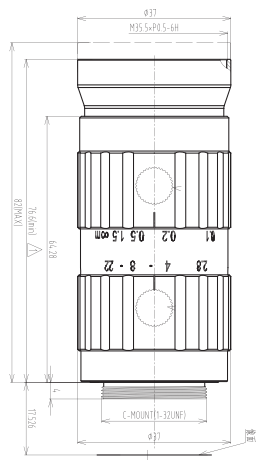

CFA35011-20C

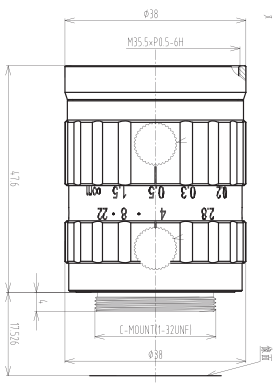

CFA50011-20C

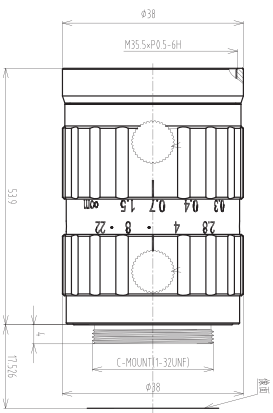

工业FA镜头系列

4/3"　　20MP

支持 4/3” 芯片，兼容 1.1”、2/3” 芯片
支持 2000 万像素面阵相机
高相对照度，大通光孔径
卓越的光学性能，紧凑型结构设计
高对比度工业 FA 镜头

型号 Model No	焦距 EFL	通光孔径 F/NO	最大像面尺寸 Image Size(Dia)	视场角 Field of View Angle			TV 畸变 Distortion(TV)	最近工作距离 MOD	滤镜螺纹 Filter Size	镜头接口 Mount
				4/3”	1"	2/3"	4/3”			
CFA12043-20C	12mm	2.8-22	4/3"	71.2° ×56.3°	54.8° ×42.3°	38.9° ×29.6°	< 2%	0.1m、0.103X	/	C-Mount
CFA16043-20C	16mm	2.8-22	4/3"	57.6° ×44.8°	43.6° ×33.4°	30.8° ×23.3°	< 1%	0.1m、0.148X	M35.5×P0.5	C-Mount
CFA25043-20C	25mm	2.8-22	4/3"	37.5° ×28.5°	27.6° ×20.9°	19.2° ×14.5°	< 0.3%	0.1m、0.221X	M35.5×P0.5	C-Mount
CFA35043-20C	35mm	2.8-22	4/3"	27.9° ×20.9°	20.6° ×15.45°	14.3° ×10.7°	< 0.04%	0.2m、0.1805X	M35.5×P0.5	C-Mount
CFA50043-20C	50mm	2.8-22	4/3"	19.8° ×14.9°	14.6° ×10.9°	10.1° ×7.5°	< 0.1%	0.3m、0.179X	M35.5×P0.5	C-Mount

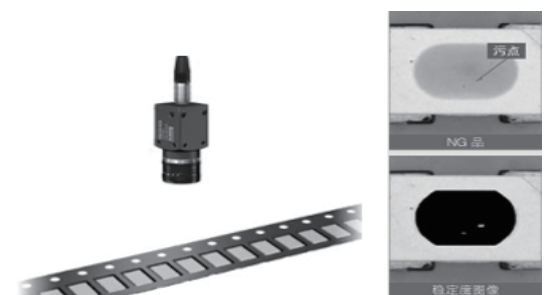

电子零件 / Electronic parts

瑕疵 / 污点
LED 外观检测
Defective/Spot
LED appearance inspection

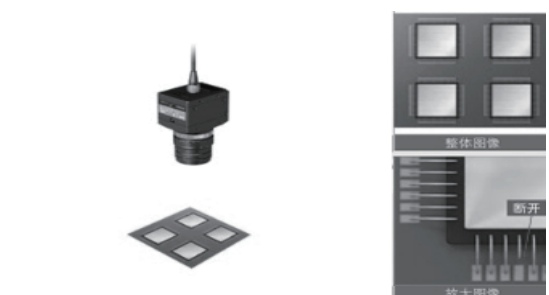

电子设备 / Electronic equipment

有无 / 辨别
检测电机线的捆扎不良和引线断裂
Identify existence / Identify classification
Detection of poor binding and broken leads of motor wires

液晶、半导体、其他
Liquid crystal, semiconductor, others

计数
SD 卡数量计算

Counting
Calculation of the number of SD cards

CFA12043-20C

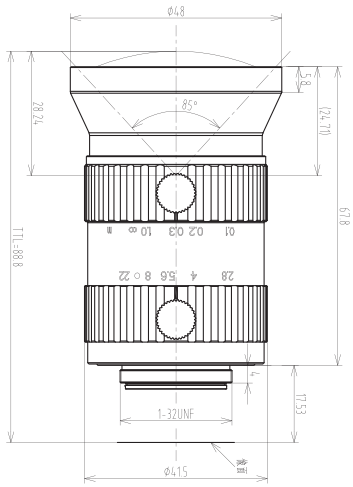

CFA16043-20C

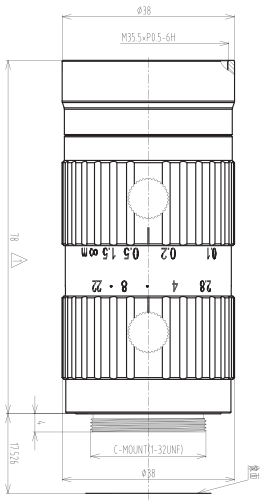

CFA25043-20C

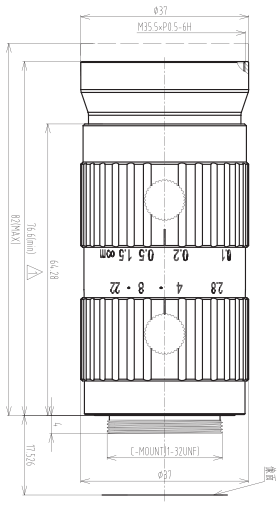

CFA35043-20C

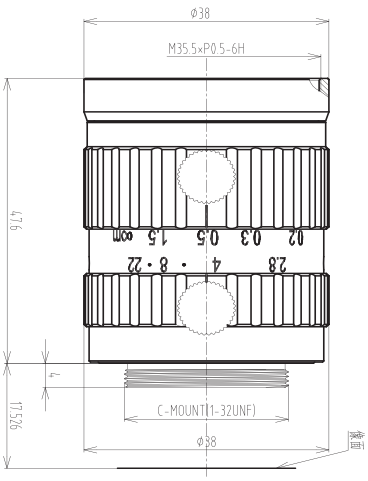

CFA50043-20C

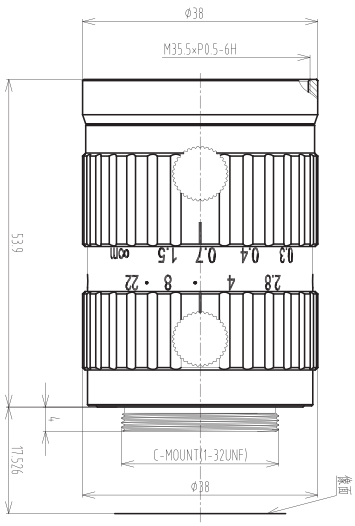

工业FA镜头系列

1.1"　　25MP

全视场分辨率可达 200lp/mm
适用于像元 2.4um 相机，最高可达 2500 万像素
兼容 1.1" 25MP 和 1" 20MP 芯片
高均匀性，高相对照度
TV 畸变 < 0.1%

型号 Model No	焦距 EFL	通光孔径 F/NO	最大像面尺寸 Image Size(Dia)	视场角 Field of View Angle			TV 畸变 Distortion(TV)	最近工作距离 MOD	滤镜螺纹 Filter Size	镜头接口 Mount
				1.1"	1"	2/3"	1.1"			
CFA08011-25C	8mm	2.8-22	1.1"	82.8°×65.8°	70.35°×70.35°	55.2°×47.5°	< 3.2%	0.1m、0.0696X	/	C-Mount
CFA12011-25C	12mm	2.8-22	1.1"	60.66°×46.5°	50°×50°	38.6°×33°	< 0.3%	0.1m、0.1055X	M46×P0.75	C-Mount
CFA16011-25C	16mm	2.8-16	1.1"	45.8°×35.3°	42.1°×32.2°	29.7°×22.5°	< 0.15%	0.1m、0.132X	M43×P0.75	C-Mount
CFA25011-25C	25mm	2.8-22	1.1"	31.6°×24.2°	28.8°×22.1°	20.4°×15.6°	< 0.1%	0.1m、0.24X	M30.5×P0.5	C-Mount
CFA35011-25C	35mm	2.8-16	1.1"	21.5°×15.9°	19.6°×14.7°	13.5°×10.2°	< 0.15%	0.15m、0.2313X	M43×P0.75	C-Mount
CFA50011-25C	50mm	2.8-16	1.1"	16.1°×12.9°	14.6°×11.7°	11.6°×8.9°	< 0.1%	0.3m、0.185X	M40.5×P0.5	C-Mount

工业 / Industry

瑕疵 / 污点
检测钢板上的瑕疵污点

Defective/Spot Check for flaws/
stains on steel plates

电子零件 / Electronic parts

连接器
连接器针脚的平整度 检测

Connector
Flatness detection of connector pins

CFA08011-25C

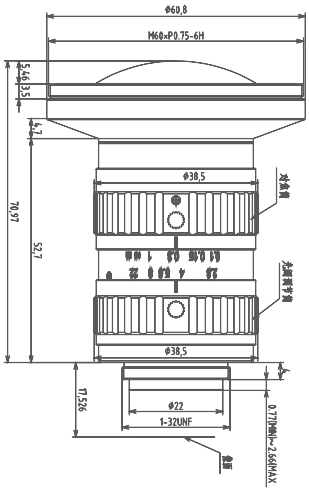

CFA12011-25C

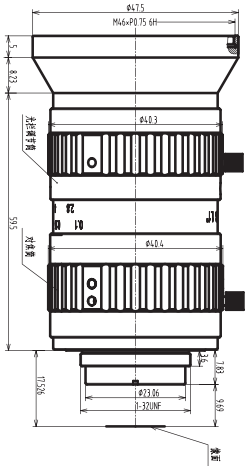

CFA16011-25C

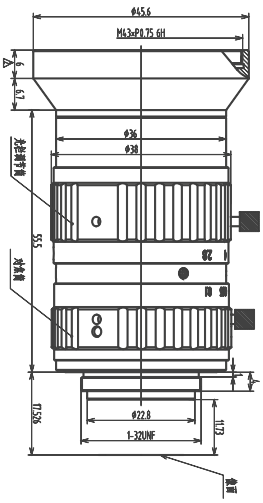

CFA25011-25C

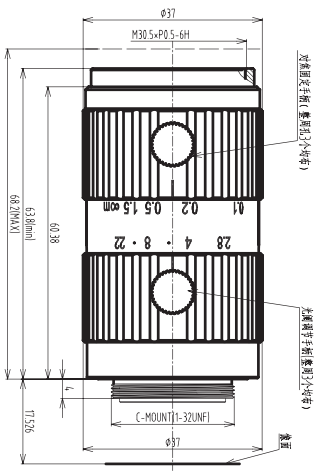

CFA35011-25C

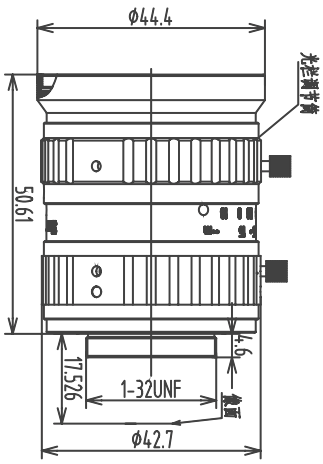

CFA50011-25C

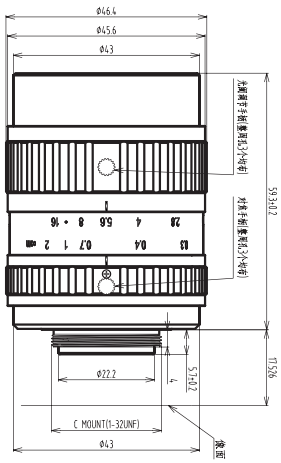

工业FA镜头系列

1.4"　　45MP

支持 1.4" 芯片，兼容 4/3"、1.1" 芯片
适用于 2.3um 像元相机，像素可达 4500 万
匹配 SONY 高像素芯片 IMX492
针对大尺寸芯片进行光学结构优化，可搭配标准 C-Mount
在任何工作距离都能保持优异的性能

型号 Model No	焦距 EFL	通光孔径 F/NO	最大像面尺寸 Image Size(Dia)	视场角 Field of View Angle 1.4"	TV 畸变 Distortion(TV)	最近工作距离 MOD	滤镜螺纹 Filter Size	镜头接口 Mount
CFA12014-45C	12mm	2.8-16	1.4"	76.1° ×55.7°	< -0.5%	0.1m	/	C-Mount
CFA25014-45C	25mm	2.8-16	1.4"	41.6° ×28.9°	< 0.05%	0.15m	M43×P0.75	C-Mount
CFA50014-45C	50mm	2.8-16	1.4"	21.5° ×14.7°	< -0.03%	0.25m	M35.5×P0.5	C-Mount

CFA12014-45C

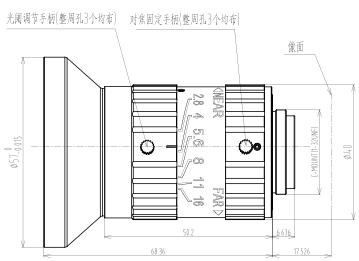

CFA25014-45C

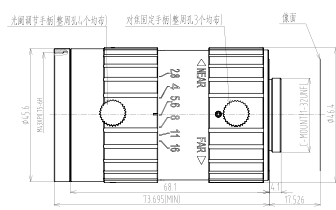

CFA50014-45C

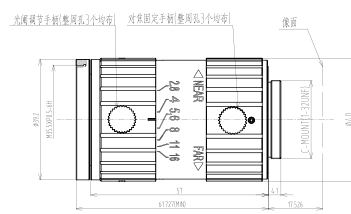

1/1.8" 5MP FA FIELD OF VIEW

型号 WD(mm)	CFA04118-5C	CFA06118-5C	CFA08118-5C	CFA12118-5C	CFA16118-5C	CFA25118-5C	CFA35118-5C	CFA50118-5C	CFA75118-5C
100	202×151	125.7×94.3	95.2×71.4	63.7×47.8	44.6×33.5	24.4×18.3	/	/	/
150	288×216	181.1×135.8	138.6×103.9	93.3×70	67.1×50.3	38.9×29.2	/	/	/
200	374×281	236.6×177.4	182.2×136.6	123×92.3	89.5×67.1	53.3×40	37.3×28	/	/
250	459×344	295×221.2	225.5×169.1	152.7×114.5	111.9×83.9	67.7×50.8	47.6×35.7	/	/
300	544×409	351×263.3	269.4×202	182.4×136.8	134.4×100.8	82.1×61.6	57.9×43.4	36.1×27.1	/
350	631×473	407.5×305.6	313×234.8	212.1×159.1	156.8×117.6	96.5×72.3	68.2×51.1	43.4×32.4	/
400	717×538	463.7×347.8	356.6×267.5	241.8×181.4	179.2×134.4	110.8×83.1	78.4×58.8	50.5×37.7	/
450	803×602	519.9×389.9	400.3×300.2	271.5×203.6	201.6×151.2	125.2×93.9	88.7×66.5	57.6×43.1	/
500	889×667	576.2×432.1	443.9×332.9	301.2×225.9	221.1×168	139.6×104.7	99×74.2	64.8×48.4	40.5×29.9
550	974×731	632.4×474.3	487.5×365.6	330.9×248.2	246.5×184.9	153.9×115.4	109.2×81.9	71.9×53.7	45.3×33.3
600	1060×796	688.6×506.5	531.2×398.3	360.6×270.4	268.9×201.7	168.3×126.2	119.5×89.6	78.9×59	50×36.5
650	1147×860	744.9×558.6	574.2×430.7	390.3×292.7	291.3×218.5	182.6×137	129.8×97.3	86.1×64.3	55×40.5
700	1233×942	801.1×600.8	618.4×463.8	419.9×314.9	313.8×235.3	197×147.8	140×105	93.2×69.6	59.5×43.8
750	1317×988	857.3×643	662×496.5	449.6×337.2	336.2×252.1	211.4×158.5	150.3×112.7	100.3×74.9	64.3×47.3
800	1403×1052	913.5×685.2	705.7×529.2	479.3×359.5	358.6×268.9	225.7×169.3	160.5×120.4	107.4×80.2	69.2×51
850	1489×1116	969.8×727.3	749.3×562	509×381.7	381×285.8	240.1×180.1	170.1×127.6	114.5×85.50	74.2×54.6
900	1574×1181	1026×769.5	792×594	538.7×404	403.5×302.6	254.4×190.8	181.1×135.8	121.6×90.8	79.1×58.2
950	1662.5×1246.9	1084.6×812.3	836×627	568.4×426.7	426.3×320.1	268.3×201.4	191.3×143.5	128.7×96.1	83.7×61.6
1000	1750×1312.5	1141.7×855	880×660	598.3×449.2	448.7×336.8	282.4×212	201.6×151.2	135.8×101.4	88.9×65.4
1500	2625×1968.8	1712.5×1282.5	1320×990	897.5×673.7	673.1×505.3	423.6×318	302.6×227.1	211.8×159	135.8×100
2000	3500×2625	2283.3×1710	1760×1320	1196.7×898.3	897.5×673.7	564.8×424	403.4×302.8	282.4×212	184.6×135.6
3000	5250×3937.5	3425×2565	2640×1980	1795×1347.5	1346.2×1010.6	847.2×636	605.1×454.3	423.6×318	276.9×203.8
4000	7000×5250	4566.7×3420	3520×2640	2393.3×1796.7	1795×1347.5	1129.6×848	806.8×605.7	564.8×424	378.9×278.9
5000	8750×6562.5	5708.3×4275	4400×3300	2991.7×2245.8	2243.7×1684.4	1412×1060	1008.9×757.1	706×530	480×353.3
6000	10606.1×7954.5	6860×5130	5280×3960	3590×2695	2692.5×2021.3	1694.4×1272	1210.3×908.6	847.2×636	553.8×407.7

1/1.7" 12MP FA FIELD OF VIEW

WD(mm) 型号	CFA06117-12C	CFA08117-12C	CFA12117-12C	CFA16117-12C	CFA25117-12C	CFA35117-12C	CFA50117-12C
100	141.83x105.74	107.12x79.76	70.51x53.10	54.24x40.84	26.29x19.83	/	/
150	204.07x152.60	153.96x114.84	101.52x79.54	77.25x58.19	41.44x31.25	26.77x20.19	/
200	266.20x199.42	200.76x149.91	132.45x99.92	100.10x75.43	56.59x42.68	37.43x28.23	/
250	328.43x246.31	247.55x184.96	163.35x123.28	122.88x92.61	71.73x54.10	48.08x36.27	/
300	390.49x293.08	294.33x220.02	194.21x146.62	145.61x109.76	86.87x65.52	58.73x44.30	38.69x29.21
350	452.48x339.81	341.10x255.06	225.07x169.96	169.09×127.73	102.01x76.94	69.38x52.34	46.08x34.78
400	514.60x386.64	387.90x290.13	255.07x193.28	191.00x144.01	117.15x88.36	80.02x60.37	53.41x40.31
450	576.63x433.39	434.64x325.15	286.73x216.61	213.69x161.13	132.28x99.79	90.68x68.41	60.69x45.81
500	638.77x480.24	481.41x360.20	317.56x239.93	236.37x178.24	147.41x111.20	101.33x76.45	67.95x51.28
550	700.76x526.97	528.16x395.24	348.40x263.25	259.04x195.35	162.55x122.62	111.95x84.47	75.18x56.74
600	762.82x573.75	574.93x430.28	379.21x286.56	281.70x212.45	177.70x134.05	122.62x92.52	82.40x62.19
650	824.80x620.97	621.69x465.33	410.04x309.88	304.36x229.54	192.81x145.46	133.26x100.55	89.60x67.62
700	886.98x667.35	668.44x500.36	440.87x333.20	327.01x246.64	207.96x156.89	143.90x100.55	96.80x73.05
800	1011.13x760.94	761.96x570.44	502.50x379.82	372.31x280.82	238.21x179.72	165.16x124.63	111.16x83.89
900	1135.30x854.54	855.49x640.53	564.14x426.45	417.61x315.01	268.48x202.56	186.49x140.72	125.50x94.72
1000	1259.25x947.99	949.02x710.61	625.82x473.10	462.91x349.18	298.80x225.43	207.80x156.78	139.81x105.5

2/3" 5MP FA FIELD OF VIEW

WD(mm) 型号	CFA08023-5C	CFA12023-5C	CFA16023-5C	CFA25023-5C	CFA35023-5C	CFA50023-5C
100	120.7×89.8	/	61.7×45.9	35.3×26.3	/	/
150	174.2×129.9	114.3×85.7	89.3×66.6	53×39.5	41.8×31.2	/
200	227.7×170	149.2×111.9	116.9×87.3	70.7×52.7	54.7×40.9	/
250	281.2×210.2	183.3×137.5	144.5×108	88.3×66	67.7×50.6	/
300	334.8×250.3	220×165	170.4×127.6	108×82	80.7×60.4	49.7×37.3
350	388.3×290.4	251.4×188.6	199.7×149.4	123.6×92.4	93.7×70.1	58.7×44
400	441.8×330.5	293.3×220	227.3×170	141.2×105.6	106.6×79.8	67.2×50.4
450	495.3×370.6	325.9×244.4	254.9×190.7	158.9×118.8	119.6×89.5	75.9×56.9
500	548.8×410.7	352×264	282.5×211.4	176.5×132	132.5×99.2	84.6×63.5
550	602.3×450.8	400×300	310×232.1	194.1×145.2	145.5×108.9	93.6×70.2
600	655.8×490.9	419×314.3	337.6×252.8	211.8×158.4	158.4×118.6	102.6×76.9
650	709.3×531	463.2×347.4	365.2×273.4	229.4×171.6	171.4×128.4	111.4×83.5
700	762.8×571.1	488.9×366.7	392.8×294.1	247×184.9	184.3×138.1	120.5×90.4
750	816.3×611.2	517.6×388.2	420.4×314.8	264.6×198.1	197.3×147.8	129.4×97.1
800	869.8×651.3	550×412.5	448×335.5	282.3×211.3	210.3×157.5	137.5×103.1
850	923.3×691.4	586.7×440	475.6×356.2	299.9×224.5	223.2×167.2	146.7×110
900	976.8×731.5	628.6×471.4	503.2×376.8	317.5×237.7	236.2×176.9	154.4×115.8
1000	1082.5×810.3	704×528	557.3×416.3	350.5×263.4	260.1×194.7	172.5×129.4
2000	2181.1×1632.7	1437.9×1078.4	1122.8×838.7	704.6×529.5	510.2×381.9	352×264

2/3" 10MP FA FIELD OF VIEW

WD(mm) 型号	CFA08023-10C	CFA12023-10C	CFA16023-10C	CFA25023-10C	CFA35023-10C	CFA50023-10C
100	120×90	80.7×60.3	58.6×43.9	36.1×27.1	25.2×19.2	/
150	173.6×130.2	117.4×88	86.1×64.6	53.7×40.3	38.1×28.6	/
200	227.2×170.4	153.8×115.4	113.6×85.2	71.5×53.5	50.7×38	/
250	280.8×210.6	190.2×142.7	141.1×105.8	88.8×66.6	63.2×47.4	/
300	334.4×250.8	226.6×170	168.6×126.5	106.4×79.8	75.8×56.8	46.81×35.11
350	387.9×291	263×197.2	196.2×147.1	123.9×92.9	88.3×66.2	55×41.25
400	441.5×331.2	299.3×224.5	223.6×167.8	141.4×106.1	100.8×75.6	63.31×47.48
450	495.1×371.3	335.7×251.8	251.2×188.4	158.9×119.2	113.4×85	71.54×53.66
500	548.7×411.5	372×279	278.7×209.1	176.5×132.4	125.9×94.4	79.28×59.46
550	602.3×451.7	408.4×306.3	306.2×229.7	194×145.5	138.4×103.8	88×66
600	655.9×491.9	444.7×333.1	333.8×250.4	211.5×158.6	150.9×113.2	95.65×71.74
650	713.2×534.7	480.8×360.4	360.7×270.5	228.9×171.6	163.6×122.7	104.76×78.57
700	763.1×572.3	517.4×388	388.8×291.7	246.6×185	176×132	112.82×84.62
750	821.9×616.2	553.8×415.2	417.1×312.8	263.9×197.9	188.8×141.6	120.55×90.41
800	870.3×652.7	590×442.5	443.7×332.9	281.6×211.2	201×150.8	129.41×97.06
900	977.4×733.1	662.7×497	498.6×374.1	316.6×237.5	226.1×169.6	146.2×109.9
1000	1084.6×813.5	735.4×551.5	553.7×415.4	351.7×263.7	251.1×188.4	162.96×122.22
2000	2156.4×1617.3	1462×1096.5	1103.3×828	702×526.5	501.6×376.2	325.93×244.44
3000	3319.2×2488.5	2215.2×1660.7	1660.4×1245.3	1059.1×793.9	752.1×564.1	488.89×366.67
5000	5371.8×4028.8	3641.7×2731.7	2758.5×2070.5	1753×1315	1253×940	800×600
2000	5371.8×4028.8	3641.7×2731.7	2758.5×2070.5	1753×1315	1253×940	800×600
3000	5250×3937.5	3425×2565	2640×1980	1795×1347.5	1346.2×1010.6	847.2×636
4000	7000×5250	4566.7×3420	3520×2640	2393.3×1796.7	1795×1347.5	1129.6×848
5000	8750×6562.5	5708.3×4275	4400×3300	2991.7×2245.8	2243.7×1684.4	1412×1060

1" 5MP FA FIELD OF VIEW

WD(mm) 型号	CFA12001-5C	CFA16001-5C	CFA25001-5C	CFA35001-5C	CFA50001-5C	CFA75001-5C
100	126.4×93	88.2×66	47.4×35.55	/	/	/
150	170.67×128	129×96.7	74.2×55.6	53.2×39.72	/	/
200	223×167.24	169.4×126.7	98.46×73.85	71.6×54.1	/	/
250	274.09×205.56	209.6×157.1	125.4×94.1	89.46×66.84	/	/
300	325.7×244.27	249.5×186.8	146.28×109.71	108.3×81.7	79.34×59.2	/
350	376.47×282.35	290.3×217.6	174.1×130.6	120.8×90.4	89.6×67.2	/
400	426.66×320	329.3×246.5	196.92×147.69	145.1×109.5	104.4×78.34	/
450	479.4×359.55	370.9×278.1	225.3×168.9	161.6×121	115.2×86.4	/
500	533.33×400	408.9×306.3	246.15×184.61	179.9×135.8	128.48×96	/
550	581.8×436.36	451.5×338.4	271.5×202.4	197.74×148	140.8×105.6	/
600	640×480	488.6×366	294.93×221.2	216.6×163.5	155.76×116.6	/
650	684.5×513.37	532.1×398.9	322.7×240.8	231.6×173.2	166.4×124.8	/
700	735.63×551.7	572.4×429.1	344.08×258.06	253.3×191.2	181.2×135.72	/
750	790.12×592.6	612.7×459.3	373.8×279.2	271.7×205.1	192×144	/
800	836.6×627.45	647.9×485.2	393.85×295.38	290.1×218.9	206.6×154.84	111.3×83.47
850	888.89×666.66	685.3×513.7	435.2×326.7	305.9×229	217.6×163.2	120.5×90.1
900	941.17×705.88	725.6×543.9	460.8×345.9	326.7×246.6	232.06×174.54	128×96
1000	1066.7×800	806.9×604.6	512×384.4	356×269.6	256.6×192.34	150.59×112.94
1100	1173.3×880	886.9×664.8	563.2×422.8	392.8×296.5	281.6×211.2	168.42×126.32
1200	1280×960	967.5×725.3	614.4×461.3	429.6×324.3	307.2×230.4	180.28×135.21
1300	1386.7×1040	1048.1×785.7	665.6×499.7	466.3×351.9	332.8×249.6	200×150
1400	1493.3×1120	1128.7×846.1	716.8×538.2	502.9×379.7	358.4×268.8	216.95×162.71
1500	1600×1200	1209.4×906.6	768×576.6	539.7×407.4	384×288	232.73×174.54

1.1" 20MP FA FIELD OF VIEW

WD(mm) 型号	CFA06011-20C	CFA08011-20C	CFA12011-20C	CFA16011-20C	CFA25011-20C	CFA35011-20C	CFA50011-20C
100	257.02×192.77	199.2×149.4	141×105.6	96.5×72.4	63.8×48	/	/
150	317×237.7	246.7×184.9	197.2×148.4	141.3×106	91.6×68.8	/	/
200	462.09×346.57	354.3×265.7	254.9×191.1	186×139.6	119.4×89.5	78.2×58.7	/
250	528.3×396.3	410.9×308.1	312×233.9	230.8×173.2	146.9×110.4	99.4×74.7	/
300	666.66×500	509.9×382.5	368.9×276.6	275.4206.8	174.1×130.9	115.9×89.9	79×59.3
350	739.8×554.8	575.5×431.5	425.9×319.4	320.2×240.3	207.4×151.4	174.5×140	92.9×69.7
400	870.7×653.1	665.8×499.3	482.9×362.2	364.9×274	231.1×173.8	180×135.5	107×80.2
450	951.2×713.4	739.7×554.6	539.9×405	409.5×307.6	256.4×192.7	199.5×120.2	121×90.7
500	1075.63×806.72	821.6×616.2	596.9×447.7	454.2×341	282×212	200.3×187.6	134.9×99
550	1162.3×871.7	904.1×677.9	653.9×490.4	498.7×374.6	313.3×235.5	220.5×165.9	148.9×111.7
600	1280×960	977.5×733.1	710.9×533.2	543.6×408.3	335.7×252.4	240.8×181.2	162.8×122.1
650	1373.8×1030.3	1068.5×801.2	765×573.9	588.5×442.4	363.4×273.2	261.1×196.7	176.7×132.5
700	1491.84*1118.88	1133.3×850	824.9×618.5	632.9×475.4	391.7×294.4	281.4×211.8	190.6×143
750	1585×1188.75	1232.7×924.3	882.7×662.2	677.7×509.5	417.7×314.1	302.1×227.6	204.5×153.4
800	1690.88×1268.16	1289.2×966.9	938.9×704.2	722.4×542.6	454.8×341.9	322×242.4	218.3×163.8
900	1901.9×1426.4	1479.4×1109.2	1052.9×789.7	811.3×609.4	503.6×378.6	362.6×273	245.6×184.3
1000	2113.3×1585	1643.7×1232.5	1166.9×875.2	900.6×676.4	564×424	503×303.5	273.5×205.3
2000	4226.7×3170	3287.5×2465	2307×1730.2	1793.5×1347.4	1084.6×815.4	809.4×609.6	547.1×410.7
5000	10566.7×7925	8218.7×6162.5	5727×4295.3	4473.2×3361	2820×2120	2029×1528.2	1379×1035.5

4/3" 20MP FA FIELD OF VIEW

WD(mm) \ 型号	CFA12043-20C	CFA16043-20C	CFA25043-20C	CFA35043-20C	CFA50043-20C
100	176.1×132.1	120.5×90.1	79.8×59.8	/	/
150	247.4×185.5	176.4×132	114.6×86	/	/
200	318.6×238.9	232.2×173.8	149.2×111.9	97.7×73.2	/
250	389.9×292.4	288.1×215.7	183.8×137.8	124.1×93	/
300	461.1×345.8	343.8×257.5	218.2×163.7	149.2×111.9	98.6×73.9
350	532.4×399.3	399.7×299.3	252.6×189.5	217.8×174.3	116×87
400	603.6×452.7	455.5×341.2	287×215.3	199.5×149.7	133.5×100.1
450	674.9×506.2	511.2×383	321.4×241	224.7×168.7	151×113.2
500	746.1×559.6	566.9×424.7	355.7×266.8	250×187.6	168.4×123.6
550	817.4×613	622.7×466.5	390×292.5	275.3×206.6	185.8×139.4
600	888.6×666.5	678.5×508.4	424.4×318.3	300.6×225.6	203.2×152.4
650	957.2×717.8	734.9×551.4	458.4×342.9	317.6×237.7	220.5×165.4
700	1031.1×773.4	790×592	493×369.8	351.2×263.7	237.9×178.5
750	1104.5×828.2	846.4×635.1	526.8×374.2	367.6×275.1	255.2×191.5
800	1173.6×880.2	901.7×675.7	561.6×421.2	401.9×301.8	272.5×204.5
900	1316.1×987.1	1012.7×758.9	630.2×427.1	452.6×339.9	306.6×230.1
1000	1458.6×1094	1124.1×842.3	698.8×524.1	627.8×378	341.4×256.2
2000	2883.7×2162.8	2238.7×1677.9	1384.5×1038.4	1010.5×759.1	682.9×512.7
5000	7158.8×5369.1	5583.6×4185.4	3441.1×2580.8	2532.7×1903.1	1721.3×1292.5

1.1" 25MP FA FIELD OF VIEW

WD(mm) 型号	CFA08011-25C	CFA12011-25C	CFA16011-25C	CFA25011-25C	CFA35011-25C	CFA50011-25C
100	212×154	134×98	106.6×80	58.8×44.1	/	/
150	302×219	191×140	140×105	87×65.4	60.9×45.6	/
200	387.5×282.9	241.2×177.7	192.4×144.3	115.1×86.5	81.5×61.0	/
250	478.7×349.5	300×221	227.5×170.6	143.3×107.7	102.7×77.2	/
300	570×416	362×265	271.2×203.4	171.5×128.9	122.8×92.4	69.19×51.89
350	661.1×482.6	417.7×307.7	318.8×239	199.7×150.1	142.1×106.5	81.92×62
400	752.3×549.1	476.5×351	358.7×269	227.8×171.2	163.2×122.6	94.85×71.11
450	843.5×615.7	535.3×394.3	402.5×301.8	255.9×192.4	183.3×137.8	107.5×81.5
500	929×678	591×433	444.7×333.5	282×212	202.8×152.1	120.75×90.57
600	1108×809	707×518	528.5×396.4	340.6×256	241.7×181.3	145.79×109.34
700	1287×940	822×602	612.3×459	397.2×298.6	284.2×213.1	171.35×128.51
800	1466×1071	936×685	696.2×522	453.4×340.8	324.7×243.5	196.92×147.69
900	1645×1202	1047×767	780.1×585	510.8×384	364.8×273.7	222.61×166.96
1000	1825×1334	1168×855	863.9×648	566.3×425.7	405.7×304.3	248.06×186.05
2000	3617×2645	2316×1697	1703×1277	1128×848	608.8×456.7	504.3×378.2
3000	5408×3965	3446×2524	2542.5×1906.9	1692×1272	1011.5×759.1	760.3×570.2
4000	7200×5268	4558×3339	3382×2536.5	2256×1696	1628×1221.5	1016.3×762.2
5000	8998×6582	5652×4140	4221.5×3166.1	2820×2120	2035×1526.9	1272.3×954.2

1.4" 45MP FA FIELD OF VIEW

WD(mm) 型号	CFA12014-45C	CFA25014-45C	CFA50014-45C
100	187.9×125.1	/	/
150	266.6×178.2	120.8×81.8	/
200	345.2×231.1	158.8×107.8	/
250	423.6×283.9	196.8×133.6	79.8×54
300	502×336.9	234.8×159.2	98.7×66.9
350	580.4×389.6	272.8×185	117.8×79.8
400	658.8×442.4	310.8×210.8	136.9×92.7
450	737.1×495.3	348.8×236.6	156×105.7
500	815.6×548.1	386.8×262.2	175.1×118.6
550	893.8×600.9	424.6×288	194.3×131.6
600	972.1×653.7	462.6×313.8	213.4×144.6
700	1128.9×759.4	538.4×365.2	251.8×170.6
800	1285.4×864.9	614.4×416.6	290.2×196.6
900	1442.1×970.5	690.2×468.2	328.6×222.6
1000	1598.9×1076.2	766×519.6	367×248.6
2000	3164.8×2132	1524.6×1034	751.3×508.9

STLWT 系列

完美替代FA镜头
体积小巧，安装简便

型号/参数	放大倍率 β(x)	物方工作距 WD(mm)	最大支持CCD尺寸 (Φmm)	像方F/#	数值孔径NA	焦距 (mm)	物方分辨率 (um)	相机接口
STLWT01X145-118	0.1	145	9.0(1/1.8")	6.0	0.00833	15.87	40.3	C
STLWT01X252-118	0.1	252	9.0(1/1.8")	5.6	0.00894	25.04	37.5	C
STLWT02X66-118	0.2	66	9.0(1/1.8")	6.0	0.01667	15.85	20.1	C
STLWT02X130-118	0.2	130	9.0(1/1.8")	5.6	0.01786	24.99	18.8	C
STLWT03X39-118	0.3	39	9.0(1/1.8")	6.0	0.025	15.89	13.4	C
STLWT04X26-118	0.4	26	9.0(1/1.8")	6.0	0.03328	15.9	10.1	C
STLWT05X56-118	0.5	56	9.0(1/1.8")	8.0	0.0312	24.89	10.8	C
STLWT06X106-118	0.6	106	9.0(1/1.8")	7.5	0.03995	45.4	8.4	C
STLWT09X81-118	0.9	81	9.0(1/1.8")	8.0	0.05607	45.63	6.0	C
STLWT1X58-118	1	58	9.0(1/1.8")	8.5	0.05841	45	5.7	C
STLWT1X76-118	1	76	9.0(1/1.8")	8.5	0.05869	45.71	5.7	C
STLWT01X360-23	0.1	360	11.0(2/3")	5.6	0.00893	34.83	37.6	C
STLWT01X544-23	0.1	544	11.0(2/3")	6.0	0.00834	52.75	40.2	C
STLWT02X192-23	0.2	192	11.0(2/3")	5.6	0.01777	35.52	18.9	C
STLWT02X264-23	0.2	264	11.0(2/3")	6.0	0.01668	47.49	20.1	C
STLWT03X88-23	0.3	88	11.0(2/3")	6.5	0.02305	24.99	14.6	C
STLWT03X135-23	0.3	135	11.0(2/3")	6.0	0.02493	36.61	13.5	C
STLWT03X183-23	0.3	183	11.0(2/3")	6.5	0.02313	46.28	14.5	C
STLWT04X68-23	0.4	68	11.0(2/3")	6.5	0.03075	25.06	10.9	C
STLWT04X106-23	0.4	106	11.0(2/3")	6.0	0.0333	37.17	10.1	C
STLWT04X144-23	0.4	144	11.0(2/3")	6.5	0.03077	45.81	10.9	C
STLWT05X90-23	0.5	90	11.0(2/3")	7.0	0.03574	38.01	9.4	C
STLWT05X121-23	0.5	121	11.0(2/3")	7.0	0.0357	45.52	9.4	C
STLWT06X78-23	0.6	78	11.0(2/3")	7.0	0.04287	39.32	7.8	C

型号/参数	放大倍率 β(x)	物方工作距 WD(mm)	最大支持CCD尺寸 (Φmm)	像方F/#	数值孔径NA	焦距 (mm)	物方分辨率 (um)	相机接口
STLWT07X70-23	0.7	70	11.0(2/3")	8.0	0.04367	40.45	7.7	C
STLWT07X95-23	0.7	95	11.0(2/3")	7.5	0.04663	45.48	7.2	C
STLWT08X65-23	0.8	65	11.0(2/3")	8.0	0.04996	42.1	6.7	C
STLWT08X87-23	0.8	87	11.0(2/3")	7.5	0.05317	45.47	6.3	C
STLWT09X60-23	0.9	60	11.0(2/3")	8.5	0.05295	43.39	6.3	C
STLWT01X238-12	0.1	238	19.2（1.2")	6.0	0.0083	25.09	40.3	C
STLWT01X352-12	0.1	352	19.2（1.2")	6.0	0.0042	34.34	80.5	C
STLWT01X516-12	0.1	516	19.2（1.2")	5.0	0.01001	50.07	33.5	C
STLWT015X154-12	0.15	154	19.2（1.2")	6.2	0.0121	25.09	27.7	C
STLWT015X239-12	0.15	239	19.2（1.2")	6.0	0.0125	36.04	26.8	C
STLWT02X113-12	0.2	113	19.2（1.2")	6.2	0.0161	25.07	20.8	C
STLWT02X183-12	0.2	183	19.2（1.2")	6.0	0.0167	36.75	20.1	C
STLWT02X276-12	0.2	276	19.2（1.2")	5.6	0.01791	52.34	18.7	C
STLWT025X148-12	0.25	148	19.2（1.2")	6.0	0.0208	37.53	16.1	C
STLWT025X229-12	0.25	229	19.2（1.2")	5.6	0.0223	53.59	15.0	C
STLWT03X70-12	0.3	70	19.2（1.2")	6.6	0.0228	24.97	14.7	C
STLWT03X125-12	0.3	125	19.2（1.2")	6.0	0.0251	38.16	13.4	C
STLWT03X197-12	0.3	197	19.2（1.2")	6.0	0.02496	54.69	13.4	C
STLWT04X49-12	0.4	49	19.2（1.2")	7.2	0.0278	24.87	12.1	C
STLWT04X98-12	0.4	98	19.2（1.2")	6.0	0.0334	39.75	10.0	C
STLWT04X157-12	0.4	157	19.2（1.2")	6.0	0.03335	57.33	10.1	C
STLWT05X37-12	0.5	37	19.2（1.2")	8.0	0.0313	24.80	10.7	C
STLWT05X80-12	0.5	80	19.2（1.2")	6.0	0.0416	39.73	8.1	C
STLWT05X133-12	0.5	133	19.2（1.2")	6.0	0.04166	60.23	8.1	C
STLWT06X117-12	0.6	117	19.2（1.2")	6.0	0.05002	63.48	6.7	C
STLWT07X106-12	0.7	106	19.2（1.2")	7.0	0.04996	67.13	6.7	C
STLWT08X98-12	0.8	98	19.2（1.2")	8.0	0.05001	71.41	6.7	C
STLWT09X91-12	0.9	91	19.2（1.2")	8.0	0.05619	76.09	6	C
STLWT1X86-12	1.0	86	19.2（1.2")	8.0	0.06235	81.57	5.4	C

STLWT01X145-118

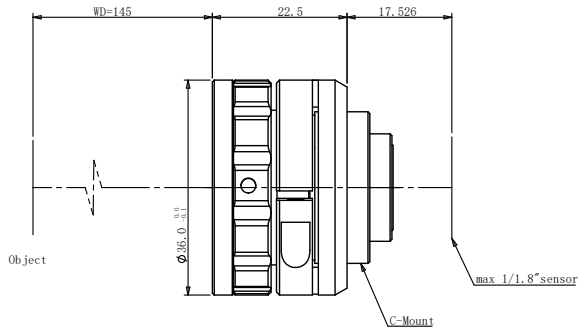

STLWT01X252-118

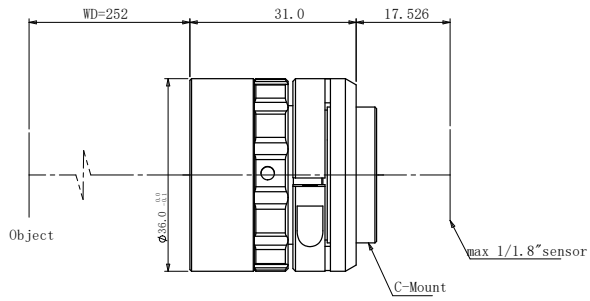

STLWT02X66-118

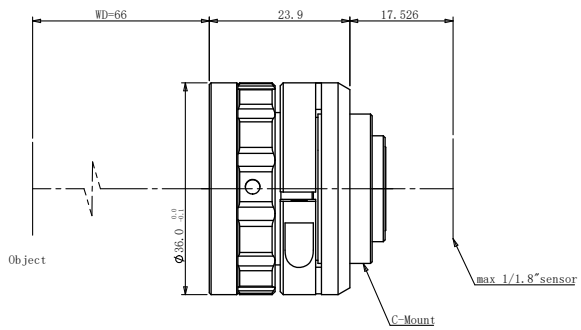

STLWT02X130-118

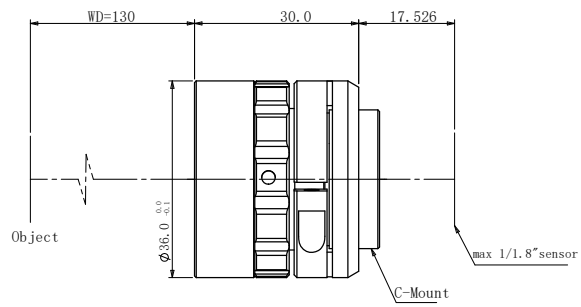

STLWT03X39-118

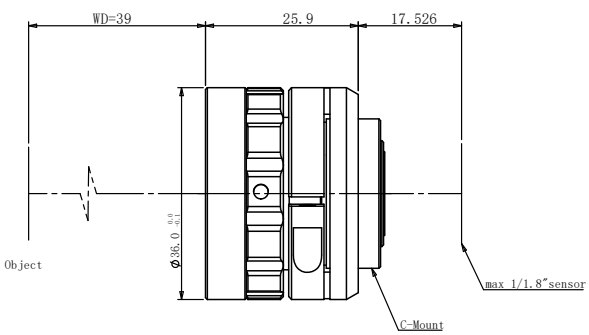

STLWT04X26-118

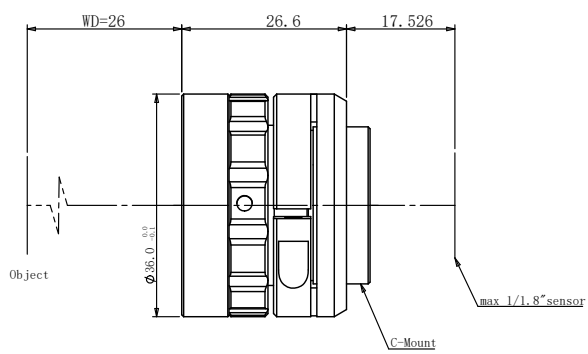

STLWT05X56-118

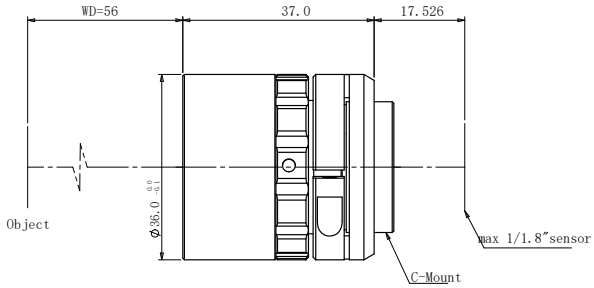

STLWT06X106-118

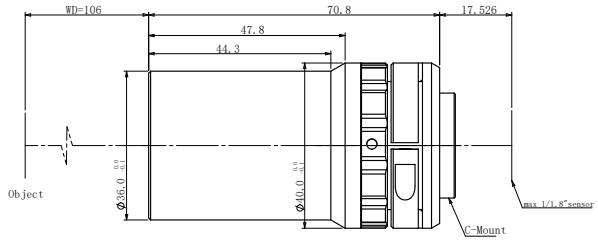

STLWT09X81-118

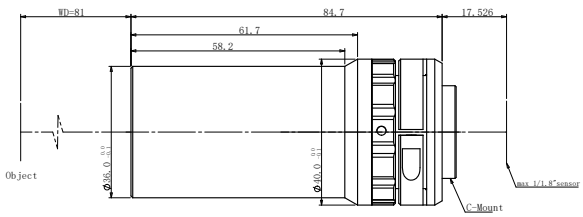

STLWT1X58-118

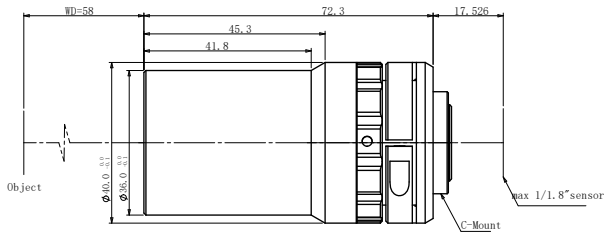

STLWT1X76-118

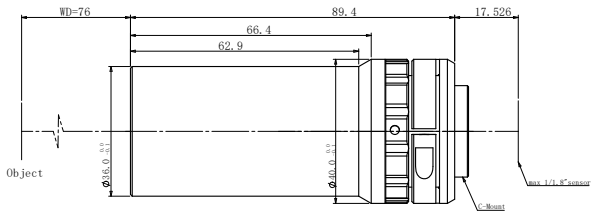

STLWT01X360-23

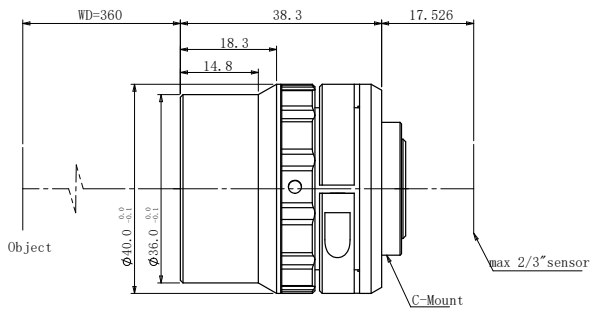

STLWT01X544-23

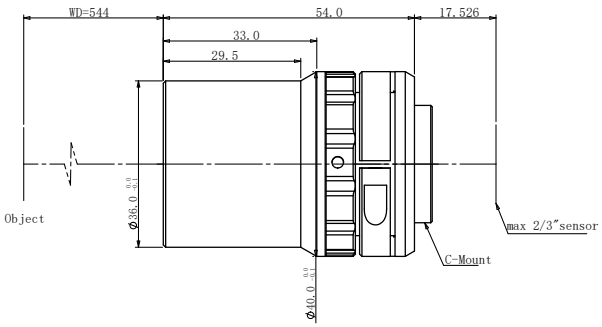

STLWT02X192-23

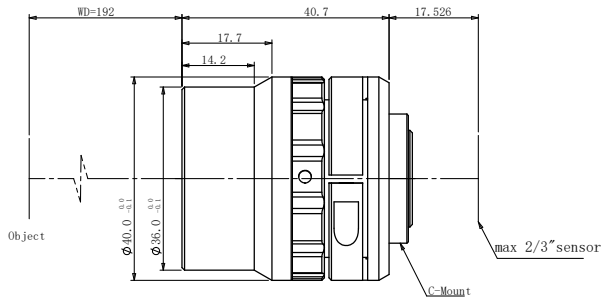

STLWT02X264-23

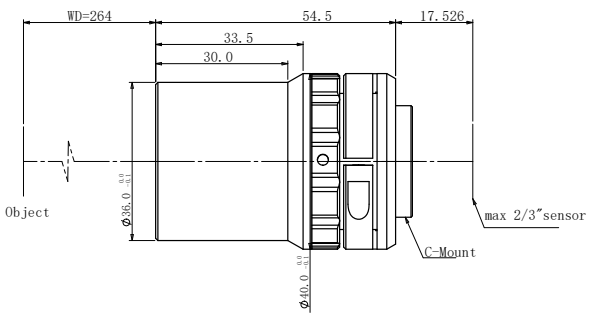

STLWT03X88-23

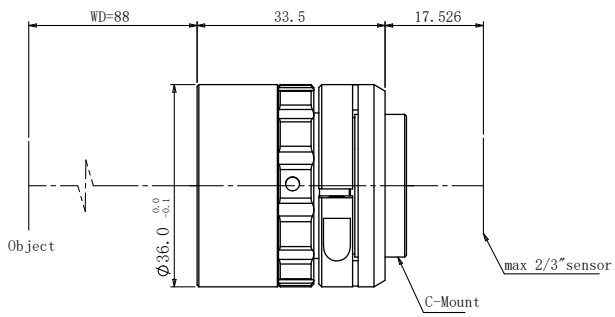

STLWT03X135-23

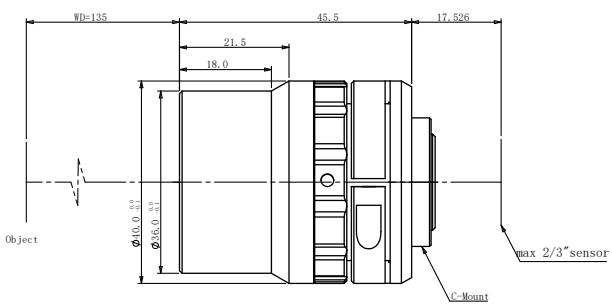

STLWT03X183-23

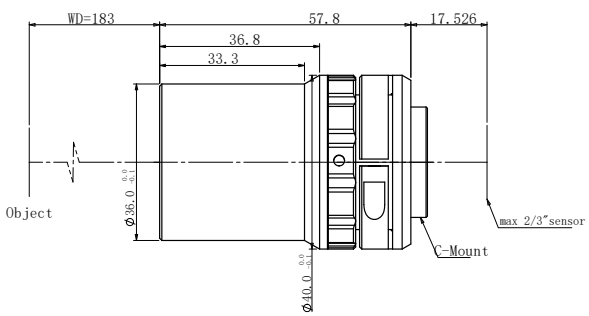

STLWT04X68-23

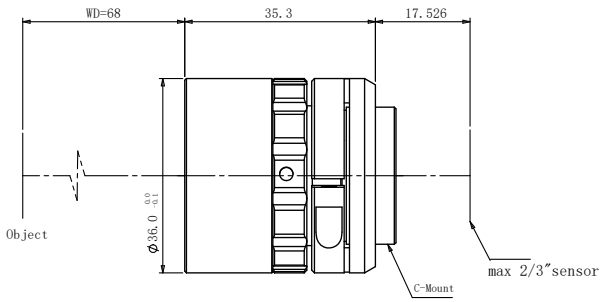

STLWT04X106-23

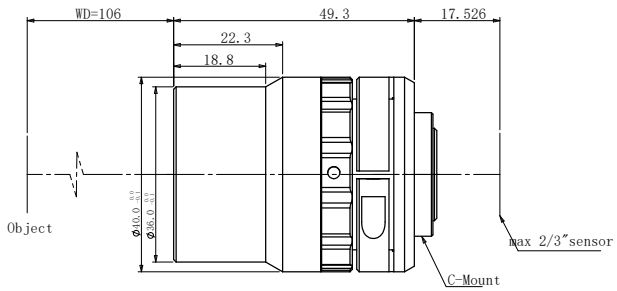

STLWT04X144-23

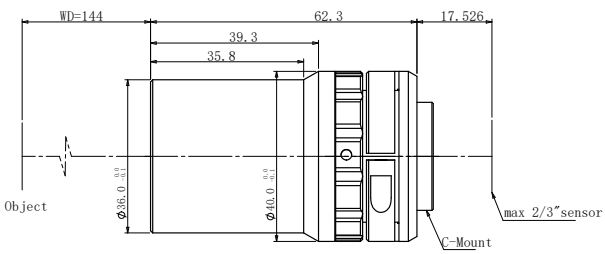

STLWT05X90-23

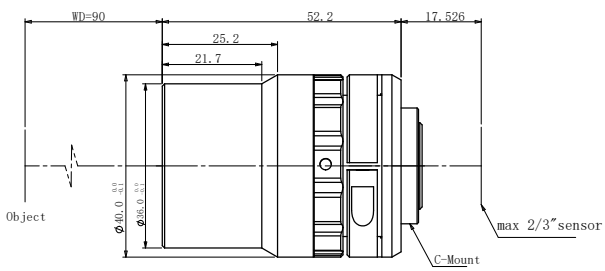

STLWT05X121-23

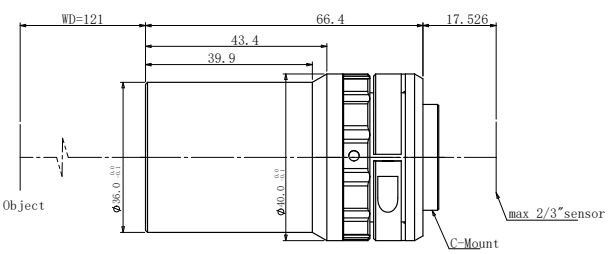

STLWT06X78-23

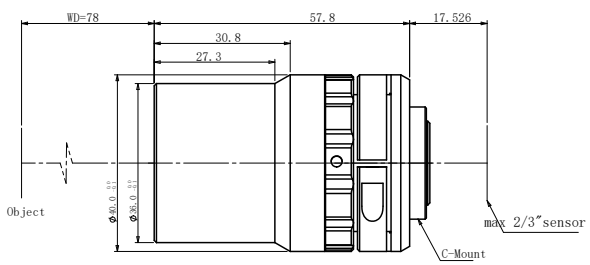

STLWT07X70-23

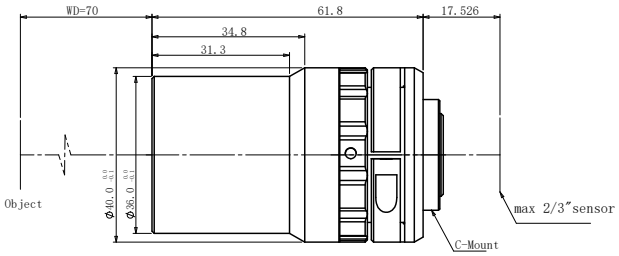

STLWT07X95-23

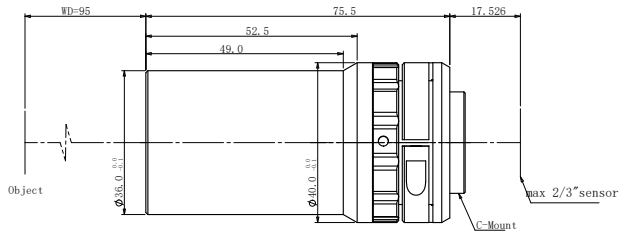

STLWT08X65-23

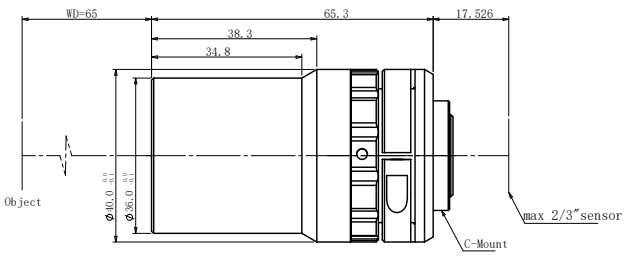

STLWT08X87-23

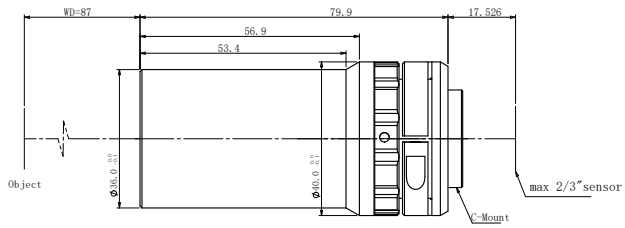

STLWT09X60-23

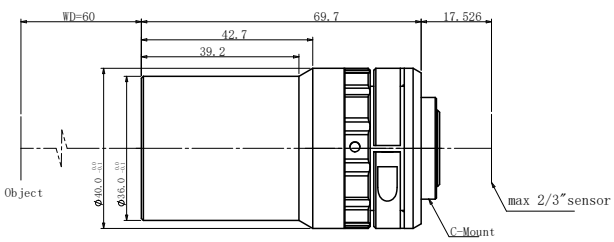

STLWT01X238-12

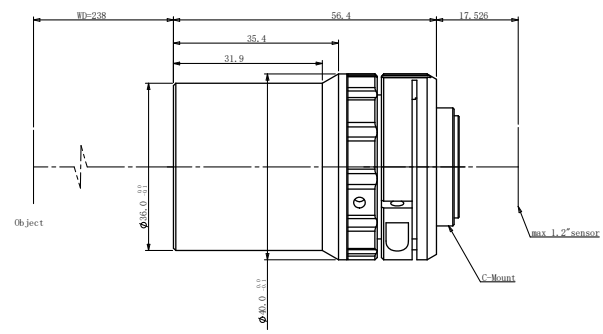

STLWT01X352-12

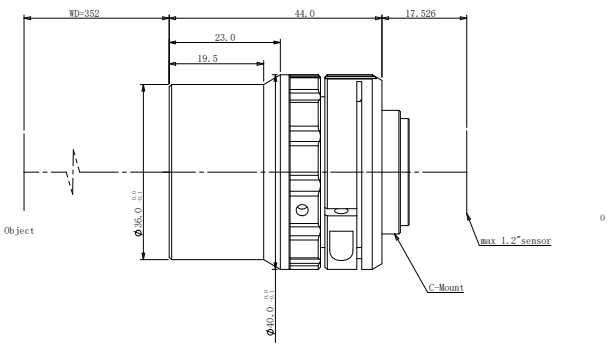

STLWT01X516-12

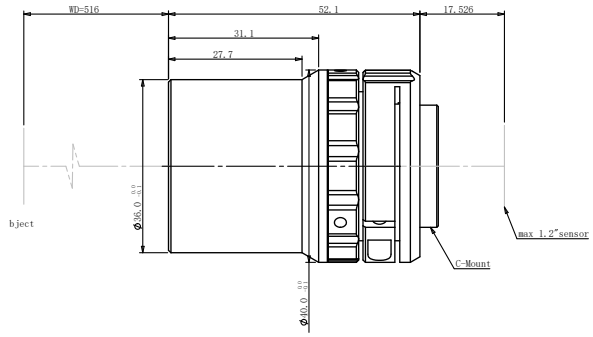

STLWT015X154-12

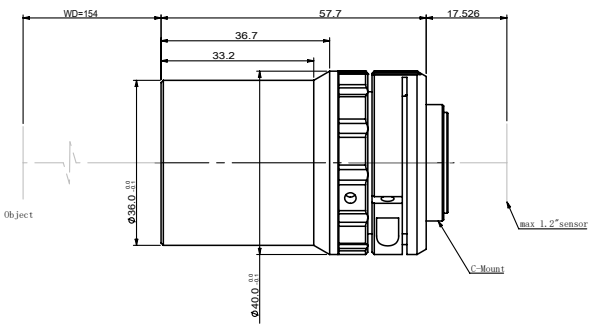

STLWT015X239-12

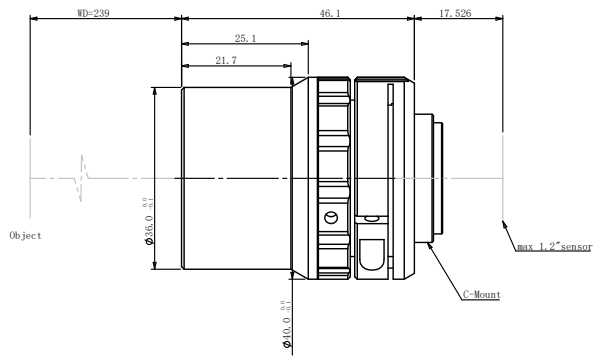

STLWT02X113-12

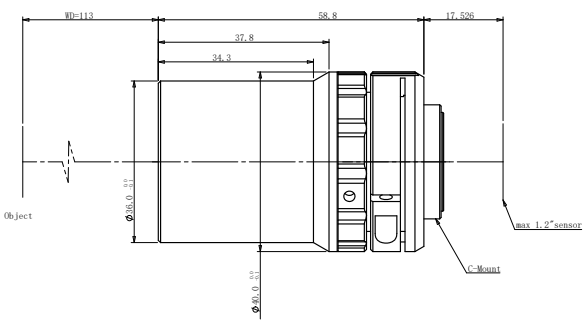

STLWT02X183-12

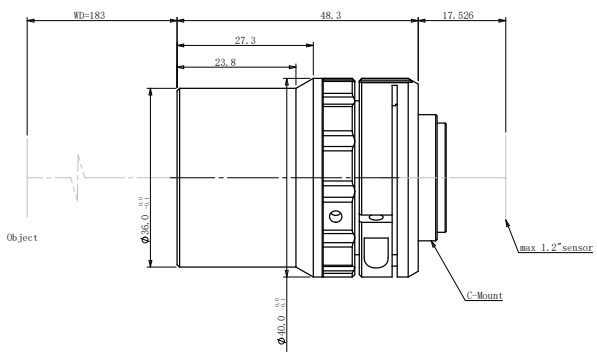

STLWT02X276-12

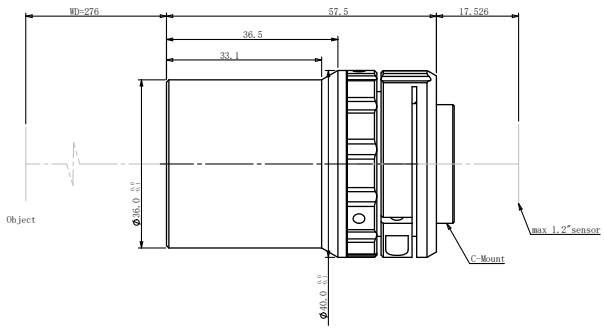

STLWT025X148-12

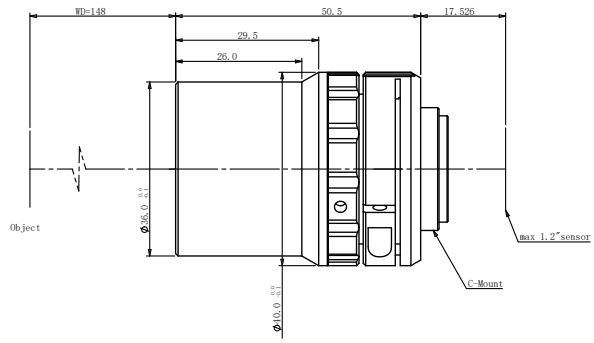

STLWT025X229-12

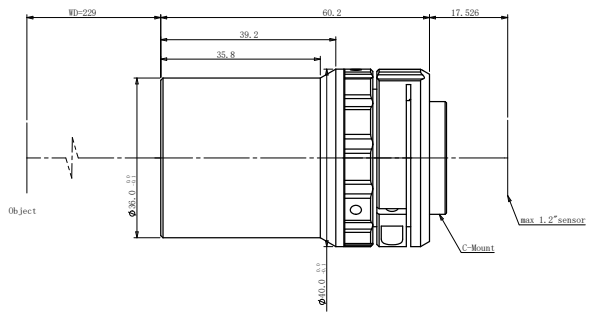

STLWT03X70-12

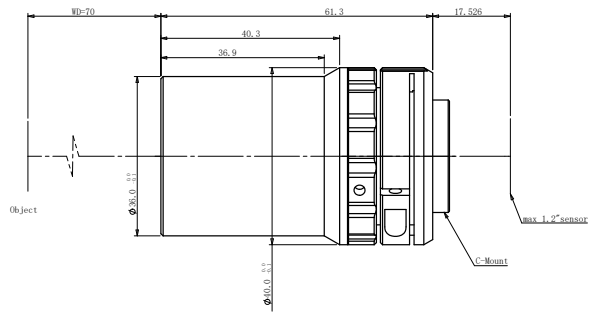

STLWT03X125-12

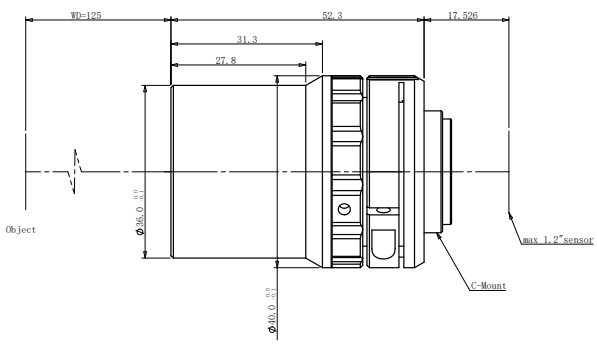

STLWT03X197-12

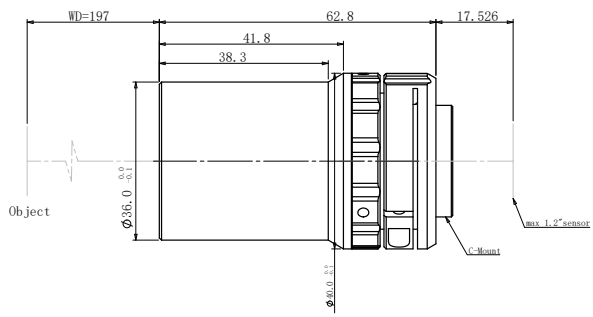

STLWT04X49-12

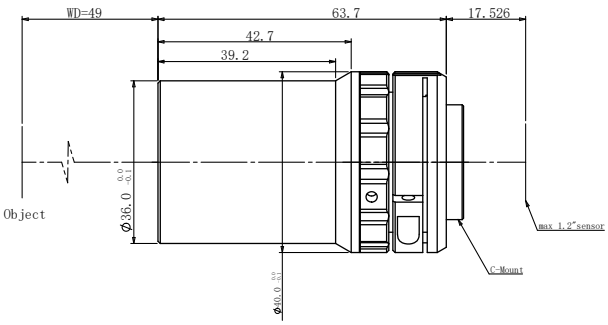

STLWT04X98-12

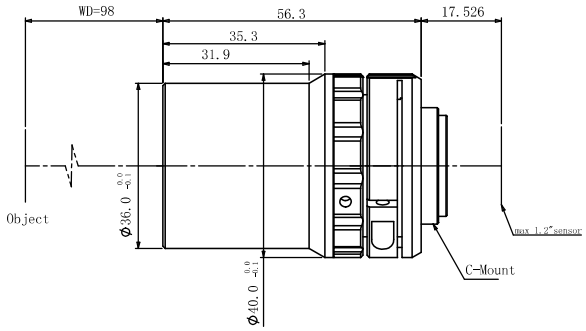

STLWT04X157-12

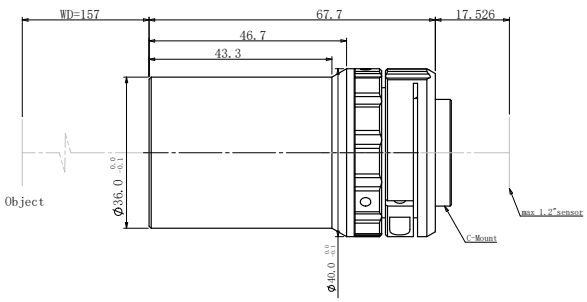

STLWT05X37-12

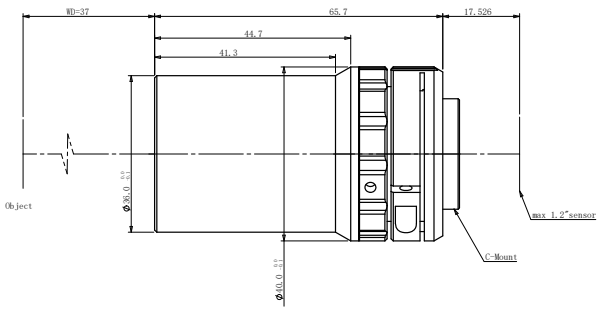

STLWT05X80-12

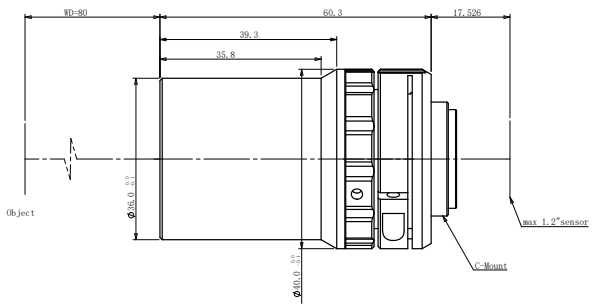

STLWT05X133-12

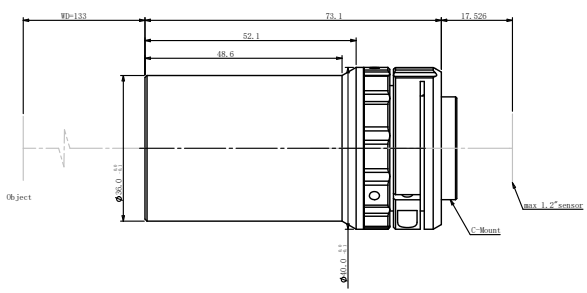

STLWT06X117-12

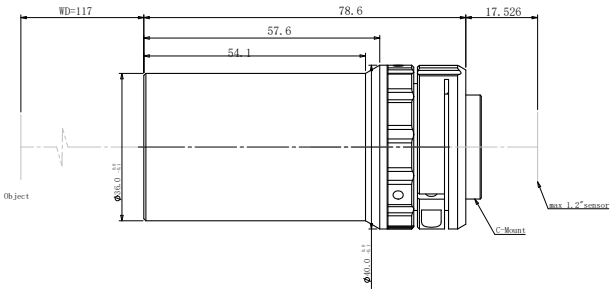

STLWT07X106-12

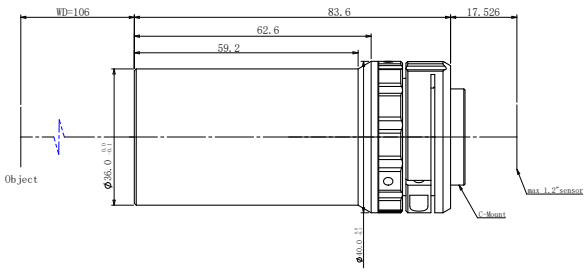

STLWT08X98-12

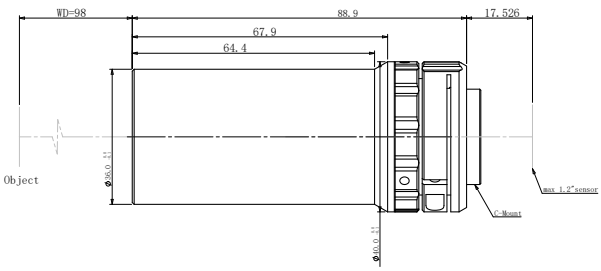

STLWT09X91-12

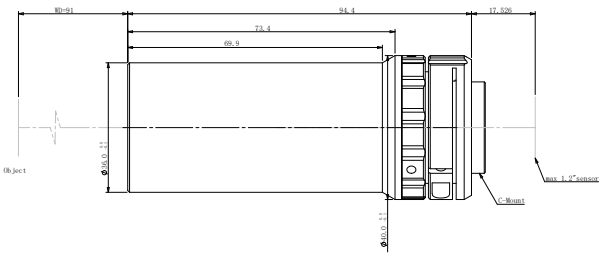

STLWT1X86-12

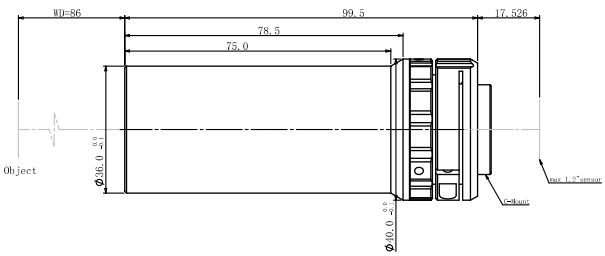

大靶面工业镜头系列

29MP

最大像面可达 43mm，支持 2900 万像素芯片
可适配 4k 线扫相机，对应 5μ/7μ 像元
光学性能优于单反镜头
标准焦段及倍率可供选择
适用于印刷包装检测

型号 Model No	焦距 EFL	标准倍率 Standard Magnifi-cation	最大像面尺寸 Image Size(Dia)	通光孔径 F/NO	TV 畸变 Distortion (TV)	倍率范围 Magnifica-tion Range	工作距离 WD	镜头接口 Mount	共轭距离 O/I	法兰距离 Flange Distance	滤镜螺纹 Filter Size
CLL3545-29F-0.1X	35mm	0.1X	ϕ45	2.8-16	< 0.4%	0.05X-0.25X	350.9	F-Mount	474.5	46.5	M58×P0.75
CLL3545-29F-0.03X	35mm	0.03X	ϕ45.3	2.8-16	< 0.5%	0.01X-0.1X	1158.7	F-Mount	1268.1	46.5	M67×P0.75
CLL4043-29F-0.1X	40mm	0.1X	ϕ43.2	2.8-22	< 0.2%	0.01X-0.25X	409	F-Mount	498.48	46.5	M62×P0.75
CLL5044-29F-0.062X	50mm	0.062X	ϕ44	2.8-22	< 0.3%	0.014X-0.24X	833.4	F-Mount	948.9	46.5	M50×P0.5
CLL6064-29F-0.167X	60mm	0.167X	ϕ64	4.0-32	0.19%	0.04X-0.33X	384.9	F-Mount	496.32	46.5	M65×P0.75
CLL8058-29F-0.3X	80mm	0.3X	ϕ58	5.6-32	< 0.01%	0.2X-0.4X	306.2	F-Mount	451.78	46.5	M52×P0.75
CLL9043-29F-0.05X	90mm	0.05X	ϕ43.2	4.0-16	< 0.01%	0.01X-0.1X	1985	F-Mount	2112	46.5	M62×P0.75

工业 / Industry

瑕疵 / 污点
检测钢板上的瑕疵污点

Defective/Spot
Check for flaws/stains on steel plates

CLL3545-29F-0.1X

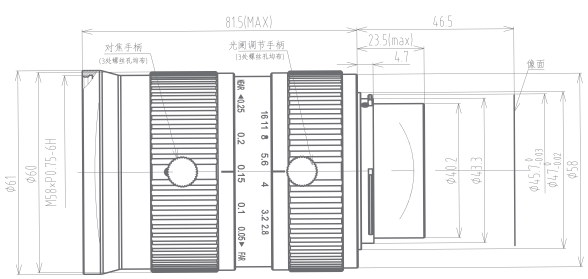

CLL3545-29F-0.03X

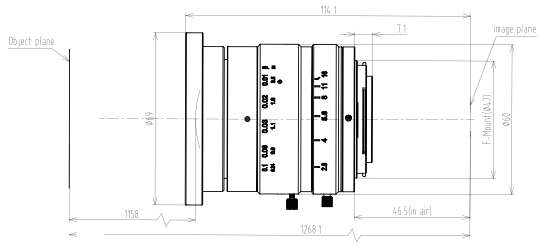

CLL4043-29F-0.1X

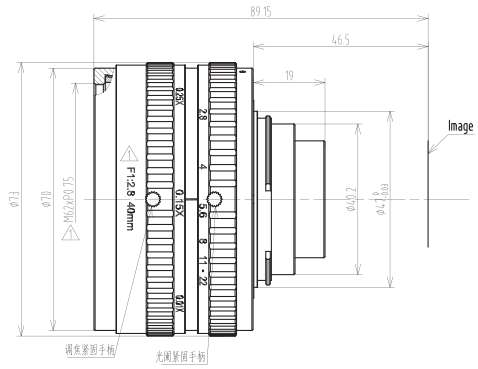

CLL5044-29F-0.062X

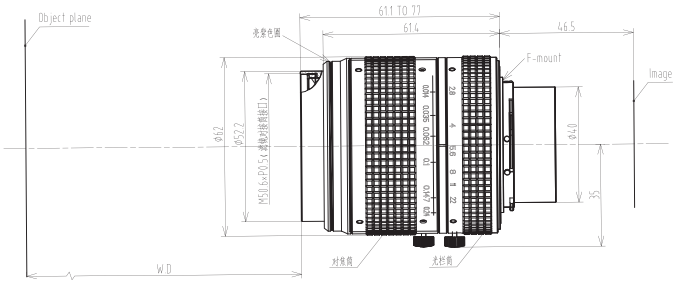

CLL6064-29F-0.167X

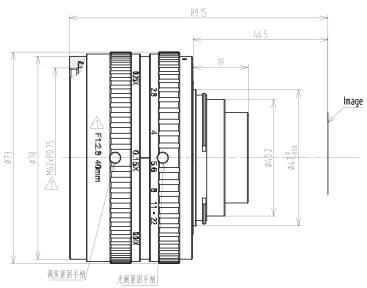

CLL8058-29F-0.3X

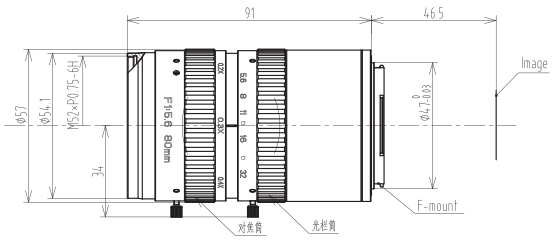

CLL9043-29F-0.05X

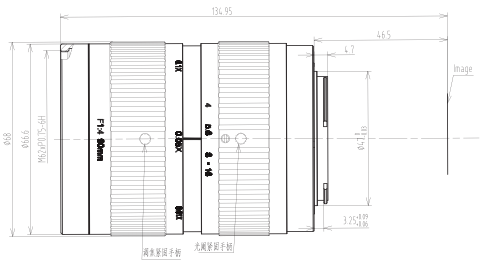

标准远心镜头系列

标准工作距离：65mm/110mm
标准倍率：0.2X-6X
高分辨率 可支持 5MP 2/3’’ 相机
高远心度、超低畸变、超高性价比
支持同轴、非同轴

型号 Model No	倍率 Reduction Ratio	最大像面尺寸 Image Size(Dia)	通光孔径 F/NO	物方数值孔径 Object NAWD	工作距离 WD	视野范围 FOV(D*H*V) 2/3”	TV 畸变 Distortion (TV)	远心度 Telecen-tricity	物方分辨率 Resolution	镜头接口 Mount	照明类型 Lighting type
CTLM02X65C-C	0.2	2/3"	6.5	0.015	65mm	55×44×33	<0.1%	<0.1°	23.25um	C-Mount	同轴
CTLM02X65-C	0.2	2/3"	6.5	0.015	65mm	55×44×33	<0.1%	<0.1°	23.25um	C-Mount	非同轴
CTLM03X65C-C	0.3	2/3"	6.7	0.022	65mm	36.7×29.3×22	<0.05%	<0.1°	15.5um	C-Mount	同轴
CTLM03X65-C	0.3	2/3"	6.7	0.022	65mm	36.7×29.3×22	<0.05%	<0.1°	15.5um	C-Mount	非同轴
CTLM05X65C-C	0.5	2/3"	9.5	0.026	65mm	22×17.6×13.2	<0.05%	<0.1°	12.8um	C-Mount	同轴
CTLM05X65-C	0.5	2/3"	9.5	0.026	65mm	22×17.6×13.2	<0.05%	<0.1°	12.8um	C-Mount	非同轴
CTLM075X65C-C	0.75	2/3"	9.5	0.04	65mm	14.6×11.7×8.8	<0.1%	<0.1°	7um	C-Mount	同轴
CTLM075X65-C	0.75	2/3"	9.5	0.04	65mm	14.6×11.7×8.8	<0.1%	<0.1°	7um	C-Mount	非同轴
CTLM08X65C-C	0.8	2/3"	9.5	0.04	65mm	13.7×11×8.2	<0.05%	<0.1°	8.4um	C-Mount	同轴
CTLM08X65-C	0.8	2/3"	9.5	0.04	65mm	13.7×11×8.2	<0.05%	<0.1°	8.4um	C-Mount	非同轴
CTLM1X65C-C	1	2/3"	11	0.045	65mm	11×8.8×6.6	<0.1%	<0.1°	7.5um	C-Mount	同轴
CTLM1X65-C	1	2/3"	11	0.045	65mm	11×8.8×6.6	<0.1%	<0.1°	7.5um	C-Mount	非同轴
CTLM15X65C-C	1.5	2/3"	12	0.063	65mm	7.3×5.8×4.4	<0.1%	<0.1°	5.4um	C-Mount	同轴
CTLM15X65-C	1.5	2/3"	12	0.063	65mm	7.3×5.8×4.4	<0.1%	<0.1°	5.4um	C-Mount	非同轴
CTLM2X65C-C	2	2/3"	13.5	0.074	65mm	5.5×4.4×3.3	<0.1%	<0.05°	4.5um	C-Mount	同轴
CTLM2X65-C	2	2/3"	13.5	0.074	65mm	5.5×4.4×3.3	<0.1%	<0.05°	4.5um	C-Mount	非同轴
CTLM3X65C-C	3	2/3"	16	0.092	65mm	3.7×2.9×2.2	<0.1%	<0.1°	3.5um	C-Mount	同轴
CTLM3X65-C	3	2/3"	16	0.092	65mm	3.7×2.9×2.2	<0.1%	<0.1°	3.5um	C-Mount	非同轴
CTLM4X65C-C	4	2/3"	18	0.112	65mm	2.75×2.5×1.65	<0.03%	<0.05°	3um	C-Mount	同轴
CTLM4X65-C	4	2/3"	18	0.112	65mm	2.75×2.5×1.65	<0.03%	<0.05°	3um	C-Mount	非同轴
CTLM6X65C-C	6	2/3"	27	0.112	65mm	1.8×1.5×1.1	<0.05%	<0.5°	2.8um	C-Mount	同轴
CTLM6X65-C	6	2/3"	27	0.112	65mm	1.8×1.5×1.1	<0.05%	<0.5°	2.8um	C-Mount	非同轴

型号 Model No	倍率 Reduction Ratio	最大像面尺寸 Image Size(Dia)	通光孔径 F/NO	物方数值孔径 Object NAWD	工作距离 WD	视野范围 FOV(D*H*V) 2/3"	TV 畸变 Distortion (TV)	远心度 Telecen-tricity	物方分辨率 Resolution	镜头接口 Mount	照明类型 Lighting type
CTLM02X110C-C	0.2	2/3"	7.8	0.012	110mm	55×44×33	<0.05%	<0.1°	23.25um	C-Mount	同轴
CTLM02X110-C	0.2	2/3"	7.8	0.012	110mm	55×44×33	<0.05%	<0.1°	23.25um	C-Mount	非同轴
CTLM03X110C-C	0.3	2/3"	7.9	0.019	110mm	36.6×29.2×22	<0.05%	<0.1°	15.5um	C-Mount	同轴
CTLM03X110-C	0.3	2/3"	7.9	0.019	110mm	36.7×29.3×22	<0.05%	<0.1°	15.5um	C-Mount	非同轴
CTLM05X110C-C	0.5	2/3"	9.3	0.027	110mm	22×17.6×13.2	<0.05%	<0.1°	12um	C-Mount	同轴
CTLM05X110-C	0.5	2/3"	9.3	0.027	110mm	22×17.6×13.2	<0.05%	<0.1°	12um	C-Mount	非同轴
CTLM08X110C-C	0.8	2/3"	8.9	0.045	110mm	13.8×11×8.2	<0.05%	<0.15°	6.25um	C-Mount	同轴
CTLM08X110-C	0.8	2/3"	8.9	0.045	110mm	13.8×11×8.2	<0.05%	<0.2°	6.25um	C-Mount	非同轴
CTLM1X110C-C	1	2/3"	11	0.045	110mm	11×8.8×6.6	0%	<0.1°	7.4um	C-Mount	同轴
CTLM1X110-C	1	2/3"	11	0.045	110mm	11×8.8×6.6	0%	<0.1°	7.4um	C-Mount	非同轴
CTLM15X110C-C	1.5	2/3"	12	0.06	110mm	7.3×5.9×4.4	<0.05%	<0.1°	4.8um	C-Mount	同轴
CTLM15X110-C	1.5	2/3"	12	0.06	110mm	7.3×5.9×4.4	<0.05%	<0.1°	4.8um	C-Mount	非同轴
CTLM2X110C-C	2	2/3"	13.6	0.074	110mm	5.5×4.4×3.3	<0.05%	<0.1°	4.5um	C-Mount	同轴
CTLM2X110-C	2	2/3"	13.6	0.074	110mm	5.5×4.4×3.3	<0.05%	<0.1°	4.5um	C-Mount	非同轴
CTLM3X110C-C	3	2/3"	17.6	0.085	110mm	3.7×2.9×2.2	<0.1%	<0.1°	3.5um	C-Mount	同轴
CTLM3X110-C	3	2/3"	17.6	0.085	110mm	3.7×2.9×2.2	<0.1%	<0.1°	3.5um	C-Mount	非同轴
CTLM4X110C-C	4	2/3"	22	0.09	110mm	2.75×2.2×1.65	<0.05%	<0.1°	3.7um	C-Mount	同轴
CTLM4X110-C	4	2/3"	22	0.09	110mm	2.75×2.2×1.65	<0.05%	<0.1°	3.7um	C-Mount	非同轴
CTLM6X110C-C	6	2/3"	35	0.085	110mm	1.83×1.46×1.1	<0.02%	<0.1°	4um	C-Mount	同轴
CTLM6X110-C	6	2/3"	35	0.085	110mm	1.83×1.46×1.1	<0.02%	<0.1°	4um	C-Mount	非同轴

65mm /110mm

工作距离	最大像面尺寸	倍率	畸变
65mm/110mm	2/3"	0.2X-6X	< 0.05%

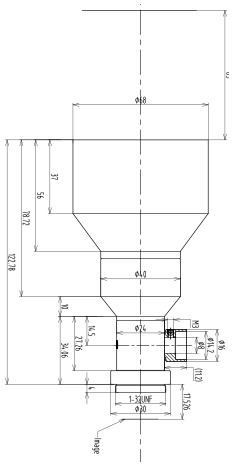

CTLM0.2X65C-C

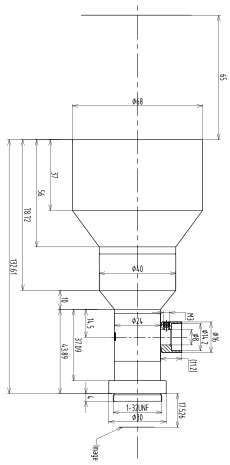

CTLM0.3X65C-C

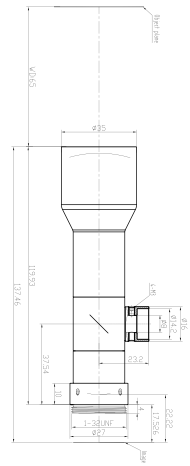

CTLM0.5X65C-C

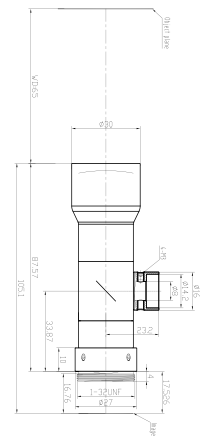

CTLM0.75X65C-C

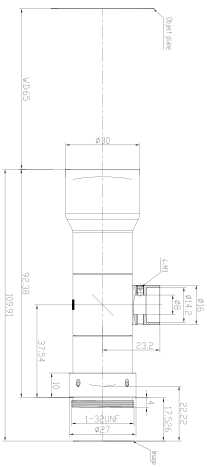

CTLM0.8X65C-C

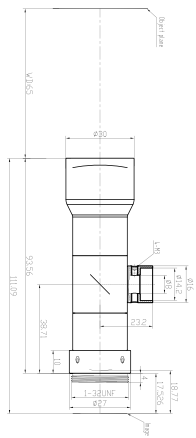

CTLM1X65C-C

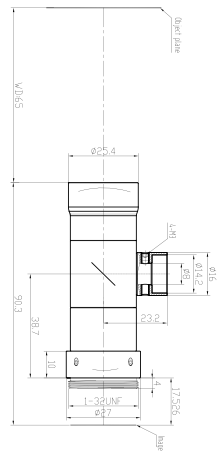

CTLM1.5X65C-C

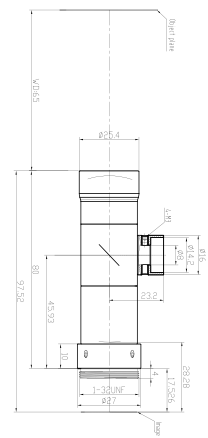

CTLM2X65C-C

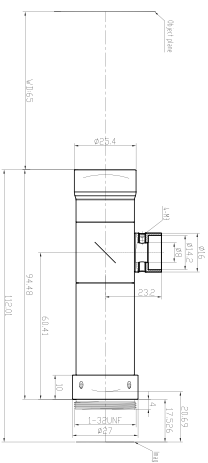

CTLM3X65C-C

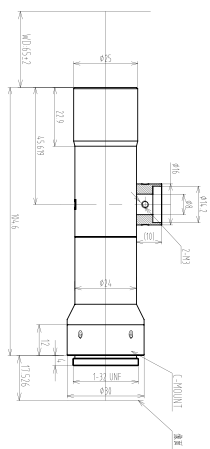

CTLM4X65C-C

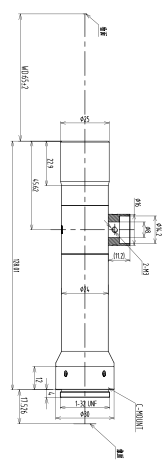

CTLM6X65C-C

TELECENTRIC
LENS
65MM
同轴远心

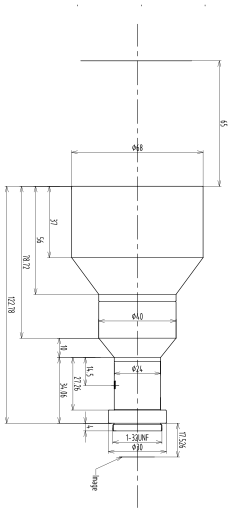

CTLM0.2X65-C

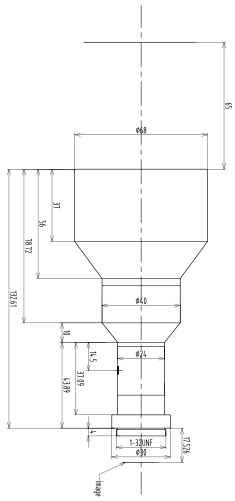

CTLM0.3X65-C

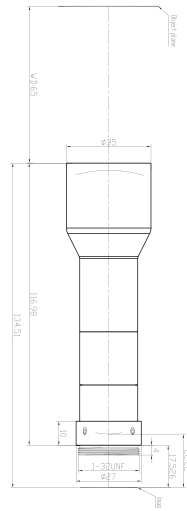

CTLM0.5X65-C

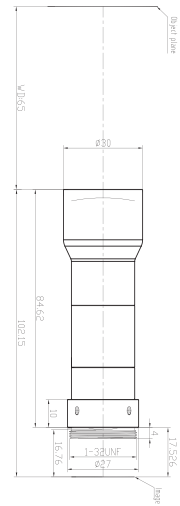

CTLM0.75X65-C

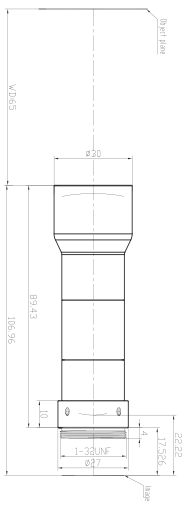

CTLM0.8X65-C

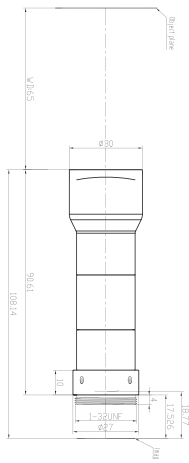

CTLM1X65-C

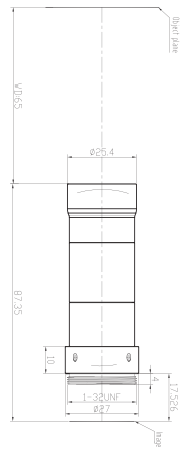

CTLM1.5X65-C

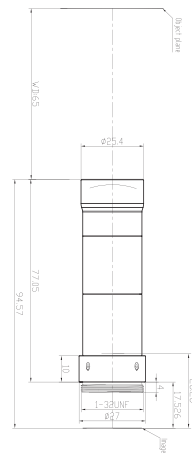

CTLM2X65-C

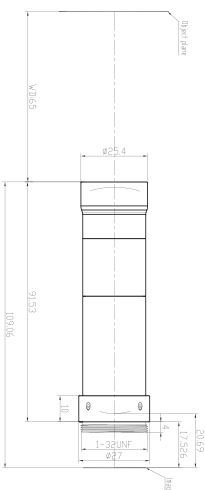

CTLM3X65-C

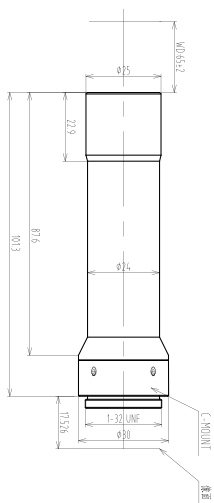

CTLM4X65-C

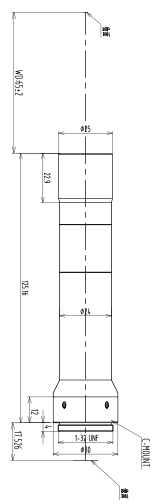

CTLM6X65-C

TELECENTRIC LENS

65MM

非同轴远心

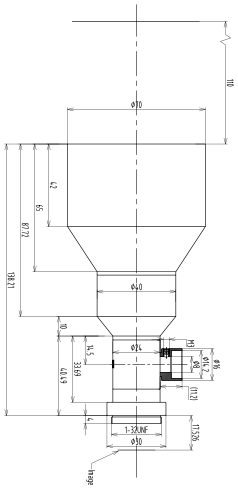

CTLM0.2X110C-C

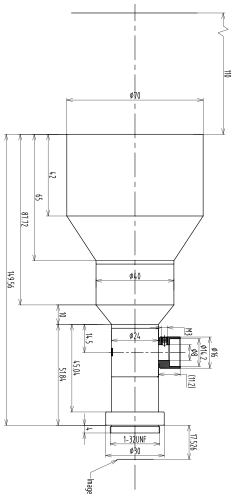

CTLM0.3X110C-C

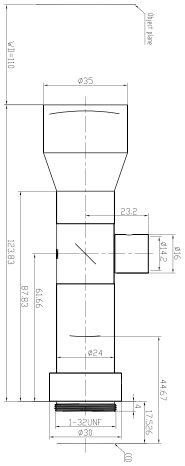

CTLM0.5X110C-C

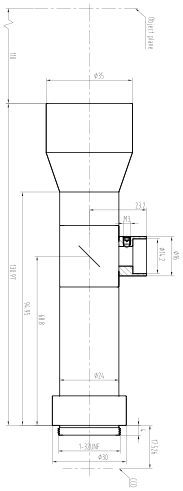

CTLM0.8X110C-C

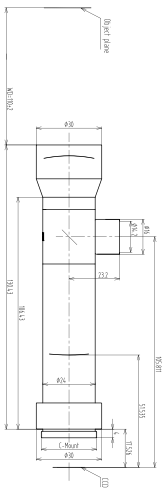

CTLM1X110C-C

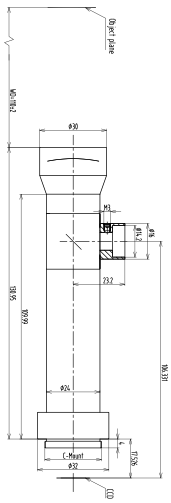

CTLM1.5X110C-C

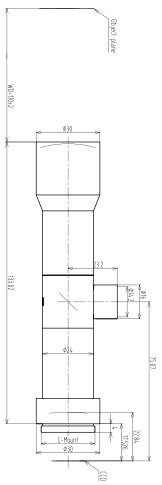

CTLM2X110C-C

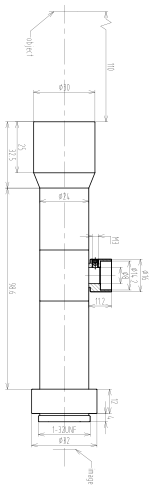

CTLM3X110C-C

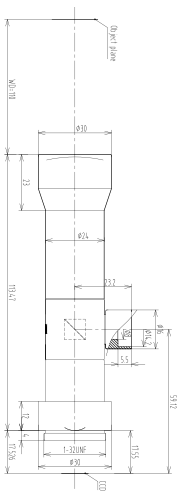

CTLM4X110C-C

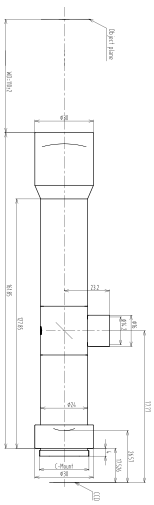

CTLM6X110C-C

TELECENTRIC
LENS
110MM
同轴远心

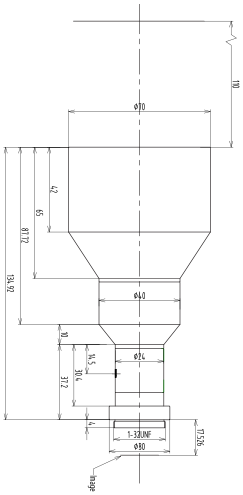

CTLM0.2X110-C

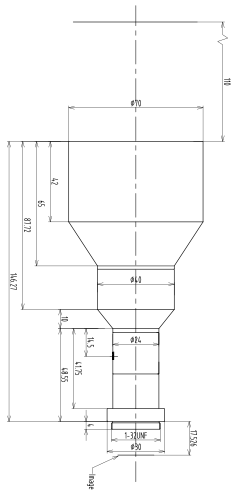

CTLM0.3X110-C

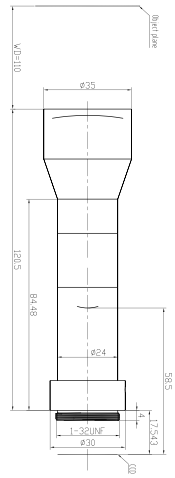

CTLM0.5X110-C

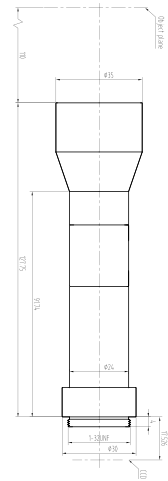

CTLM0.8X110-C

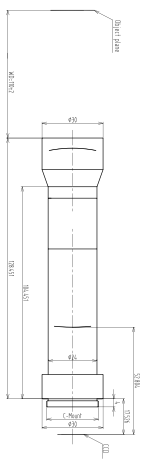

CTLM1X110-C

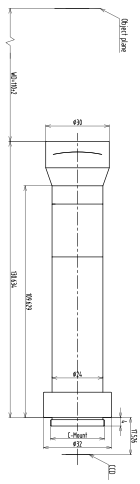

CTLM1.5X110-C

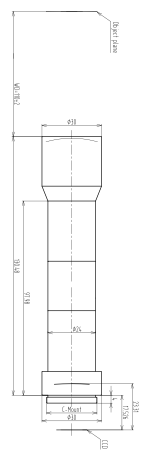

CTLM2X110-C

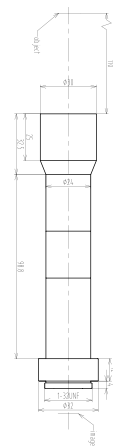

CTLM3X110-C

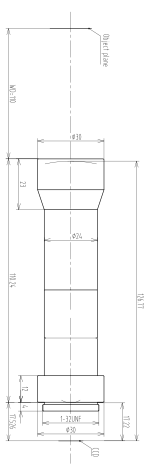

CTLM4X110-C

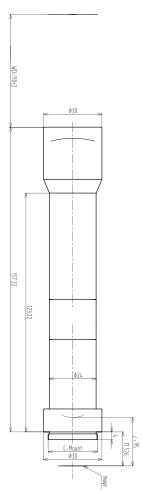

CTLM6X110-C

TELECENTRIC
LENS
110MM
非同轴远心

DTLW-125X 系列

最高支持 1/2.5"靶面相机

镜头型号	物方视场 FOV (Φmm)	放大倍率 β(x)	物方工作距 WD(mm)	支持 CCD 尺寸 (Φmm)	像方最佳 F/#	像方 MTF30 (lp/mm)	物方最大景深 DOF(mm)	像方畸变 (% max)	物方远心度 (° max)	物像距 I/O (mm)	镜头总长 (mm)	相机接口
DTLW430-125X	16	0.430	28±1	7.2(1/2.5")	4.5	>150	2.0	<0.1	<0.1	113±1	68	C
DTLW300-125X	24	0.300	45±1	7.2(1/2.5")	4.5	>150	4.1	<0.1	<0.1	149±2	87.2	C
DTLW260-125X	27	0.260	80±1	7.2(1/2.5")	4.5	>150	5.4	<0.1	<0.1	213±2	116.4	C
DTLW210-125X	34	0.210	60±1	7.2(1/2.5")	4.5	>150	8.4	<0.1	<0.1	181±2	103.8	C
DTLW200-125X	36	0.200	118±2	7.2(1/2.5")	4.5	>150	9.2	<0.1	<0.1	273±2	138.25	C
DTLW150-125X	48	0.150	120±2	7.2(1/2.5")	4.5	>150	16.5	<0.1	<0.1	279±2	141.44	C
DTLW120-125X	60	0.120	165±2	7.2(1/2.5")	4.5	>150	25.7	<0.1	<0.1	325±2	142.5	C
DTLW100-125X	72	0.100	180±2	7.2(1/2.5")	4.5	>150	37.1	<0.1	<0.1	386±3	188.7	C
DTLW090-125X	80	0.090	240±4	7.2(1/2.5")	4.5	>150	45.8	<0.1	<0.1	438±3	180.8	C
DTLW080-125X	90	0.080	200±3	7.2(1/2.5")	4.5	>150	58.0	<0.1	<0.1	434±4	217.2	C
DTLW072-125X	100	0.072	220±3	7.2(1/2.5")	4.5	>150	71.6	<0.1	<0.1	473±4	235.79	C
DTLW066-125X	109	0.066	360±5	7.2(1/2.5")	4.5	>150	85.2	<0.1	<0.1	637±5	260.1	C
DTLW053-125X	135	0.053	330±5	7.2(1/2.5")	4.5	>150	132.1	<0.1	<0.1	667±5	320.35	C
DTLW048-125X	150	0.048	300±5	7.2(1/2.5")	4.5	>150	161.1	<0.1	<0.1	649±5	331.62	C
DTLW039-125X	184	0.039	420±5	7.2(1/2.5")	4.5	>150	244.0	<0.1	<0.1	888±5	450.74	C
DTLW030-125X	240	0.030	436±5	7.2(1/2.5")	5.7	>180	528.8	<0.1	<0.1	1024±5	570.85	C
DTLW027-125X	266	0.027	510±5	7.2(1/2.5")	4.5	>200	509.2	<0.1	<0.1	1101±5	574.44	C
DTLW023-125X	313	0.023	470±6	7.2(1/2.5")	5.2	>180	815.2	<0.1	<0.1	1233±6	746.29	C

DTLW430-125X

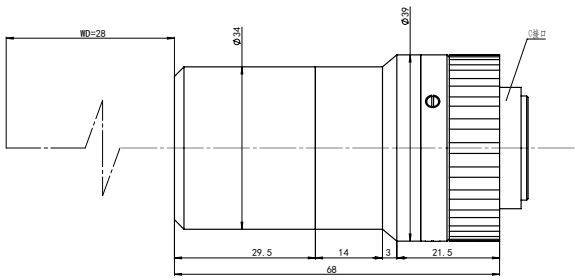

DTLW300-125X

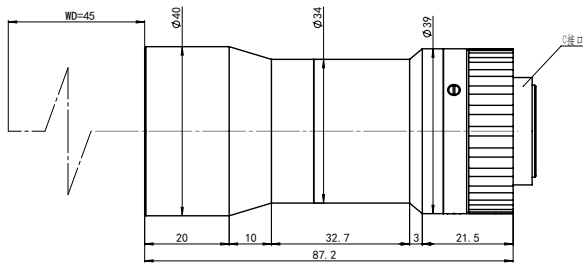

DTLW260-125X

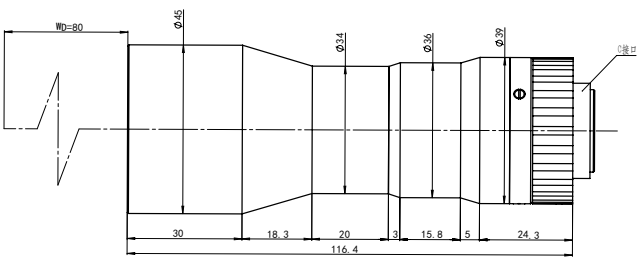

DTLW210-125X

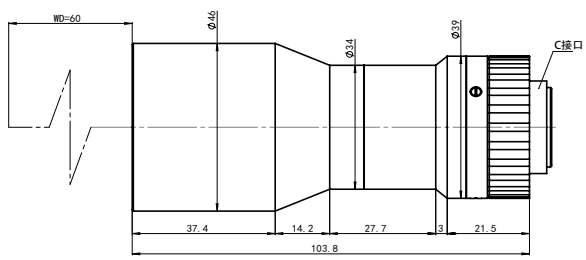

DTLW200-125X

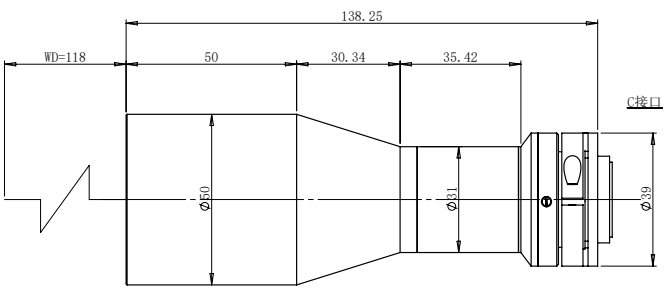

DTLW150-25X

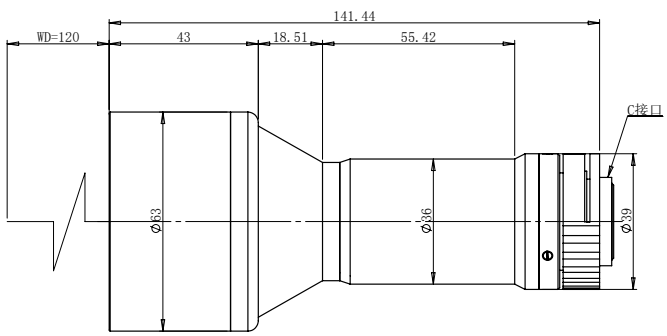

DTLW120-125X

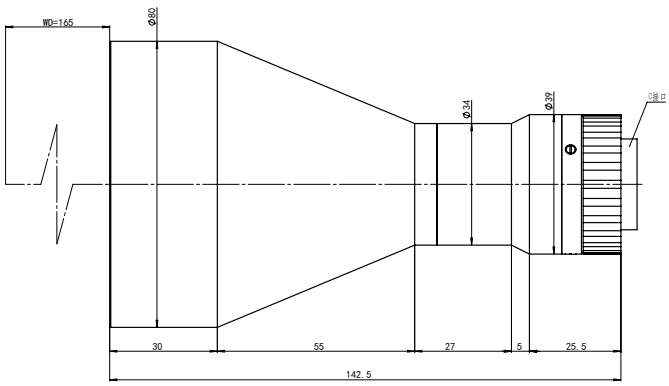

DTLW100-125X

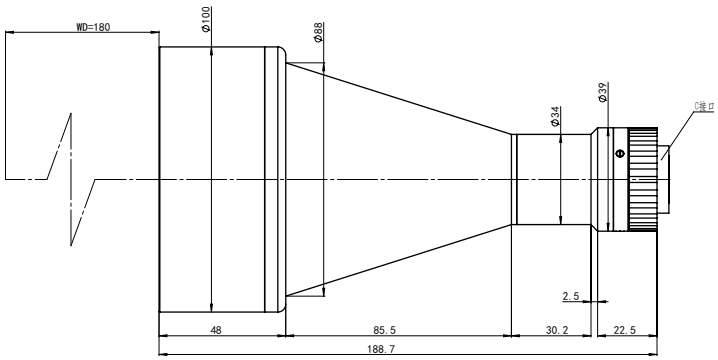

DTLW090-125X

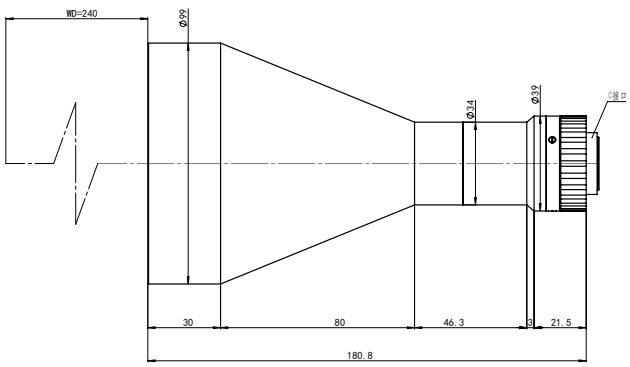

DTLW080-125X

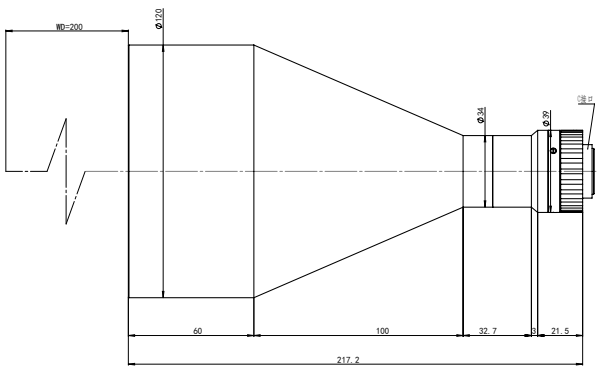

DTLW072-125X

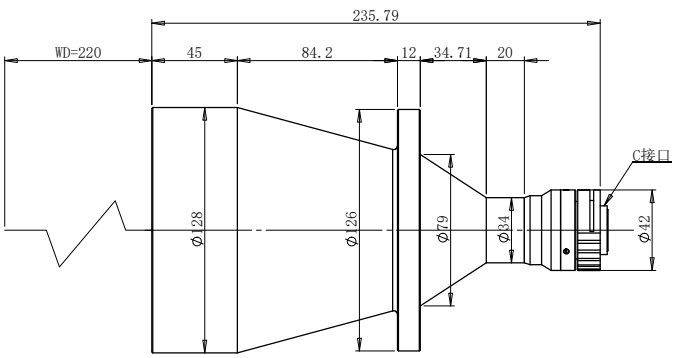

DTLW066-125X

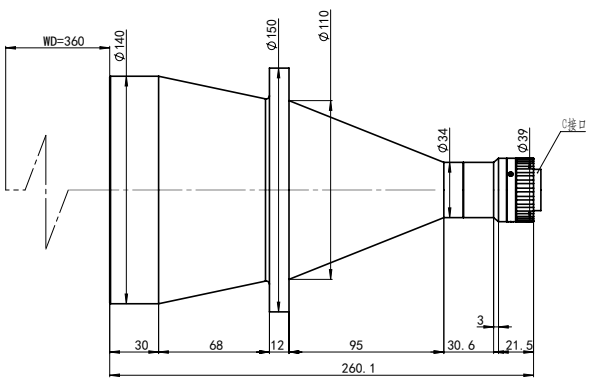

DTLW053-125X

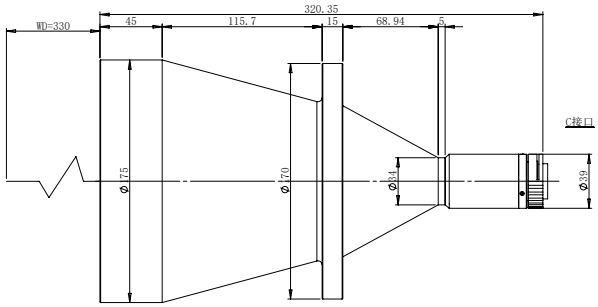

DTLW048-125X

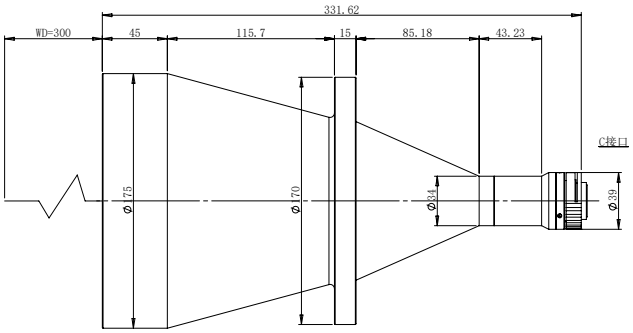

DTLW039-125X

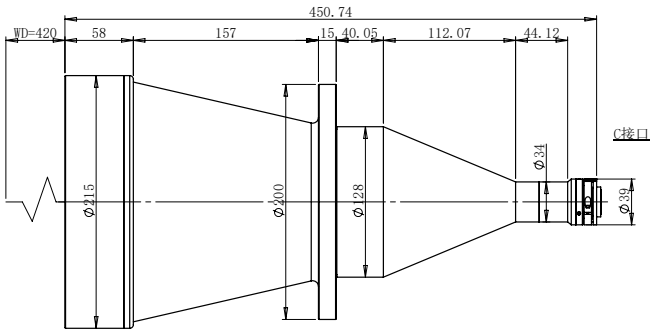

DTLW030-125X

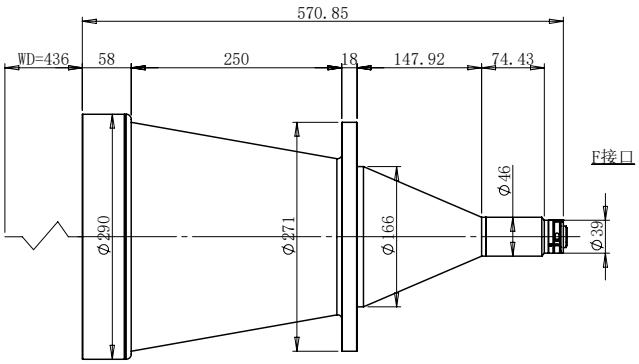

DTLW027-125X

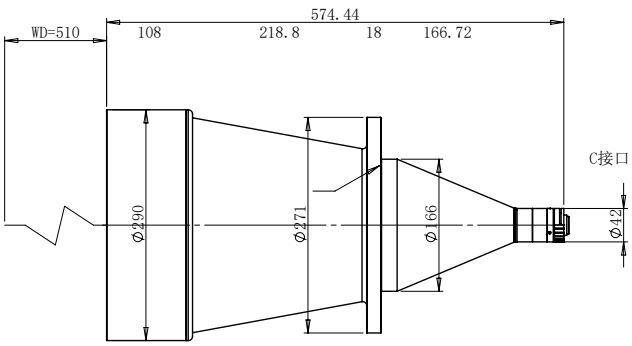

DTLW023-125X

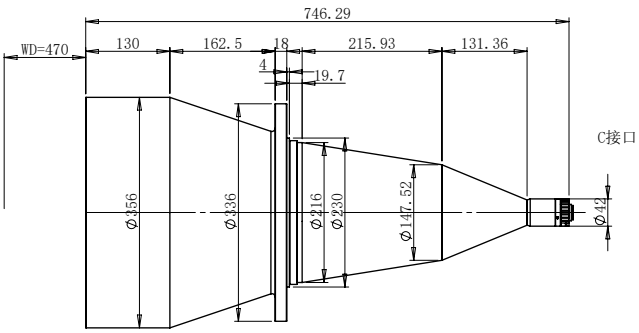

DTLW-12X 系列

最高支持 1/2"靶面相机

镜头型号	物方视场 FOV (Φmm)	放大倍率 β(x)	物方工作距 WD(mm)	支持 CCD 尺寸 (Φmm)	像方最佳 F/#	像方 MTF30 (lp/mm)	物方最大景深 DOF(mm)	像方畸变 (% max)	物方远心度 (° max)	物像距 I/O (mm)	镜头总长 (mm)	相机接口
DTLW720-12X	11	0.720	65±1	8.0(1/2")	4.6	>150	0.7	<0.1	<0.1	240±1	157.6	C
DTLW250-12X	32	0.250	65±1	8.0(1/2")	4.6	>150	6.0	<0.1	<0.1	175±2	92.6	C
DTLW220-12X	36	0.220	110±3	8.0(1/2")	4.6	>110	7.8	<0.1	<0.1	256±3	128.6	C
DTLW170-12X	47	0.170	120±3	8.0(1/2")	4.6	>150	13.1	<0.1	<0.1	259±3	121.63	C
DTLW160-140-12X	50	0.160	140±3	8.0(1/2")	4.6	>150	14.8	<0.1	<0.1	284±3	127	C
DTLW160-200-12X	50	0.160	200±3	8.0(1/2")	4.6	>150	14.8	<0.1	<0.1	360±3	143.47	C
DTLW146-12X	54	0.146	135±2	8.0(1/2")	4.6	>150	17.8	<0.1	<0.1	300±3	148	C
DTLW140-12X	57	0.140	85±1	8.0(1/2")	4.6	>150	19.3	<0.1	<0.1	235±4	132.93	C
DTLW130-12X	61	0.130	110±2	8.0(1/2")	4.6	>150	22.4	<0.1	<0.1	302±3	175.15	C
DTLW120-12X	66	0.120	200±4	8.0(1/2")	4.6	>150	26.3	<0.1	<0.1	401±4	184.2	C
DTLW090-12X	88	0.090	185±3	8.0(1/2")	4.6	>150	46.8	<0.1	<0.1	404±4	202.38	C
DTLW080-12X	100	0.080	290±5	8.0(1/2")	4.6	>150	59.3	<0.1	<0.1	546±5	238.63	C
DTLW070-12X	114	0.070	250±5	8.0(1/2")	4.6	>150	77.4	<0.1	<0.1	534±5	266.81	C
DTLW060-12X	133	0.060	230±5	8.0(1/2")	4.6	>150	105.4	<0.1	<0.1	553±5	306.23	C
DTLW050-12X	160	0.050	320±5	8.0(1/2")	4.6	>150	151.8	<0.1	<0.1	751±5	413.62	C
DTLW040-12X	200	0.040	410±5	8.0(1/2")	4.6	>150	237.1	<0.1	<0.1	717±5	289.69	C
DTLW030-12X	266	0.030	480±5	8.0(1/2")	5.0	>200	458.3	<0.1	<0.1	1061±5	563.56	C
DTLW026-12X	310	0.0258	510±6	8.0(1/2")	4.9	>185	614.9	<0.1	<0.1	1292±6	764.68	C

DTLW720-12X

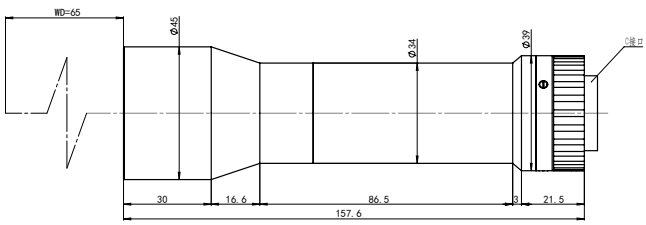

DTLW250-12X

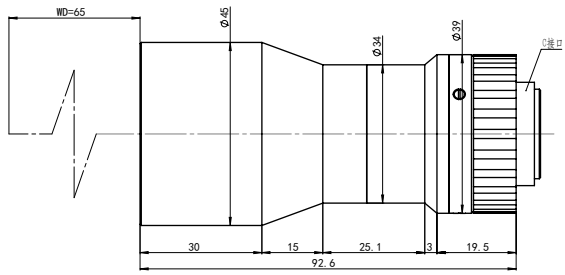

DTLW220-12X

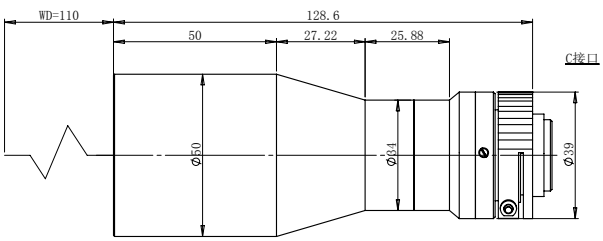

DTLW170-12X

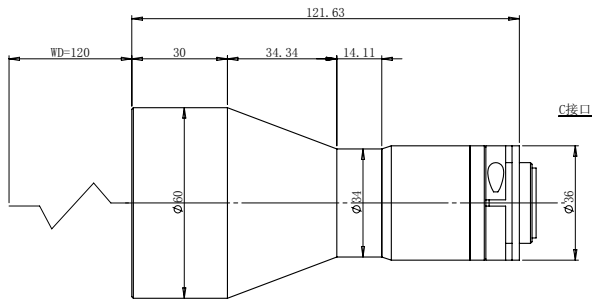

DTLW160-140-12X

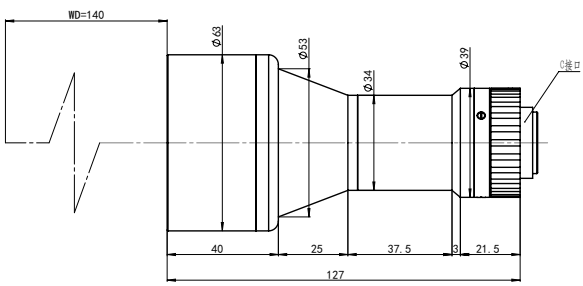

DTLW160-200-12X

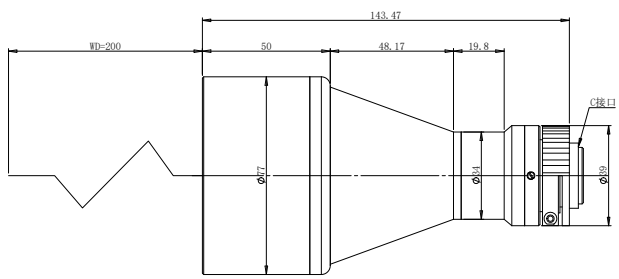

DTLW146-12X

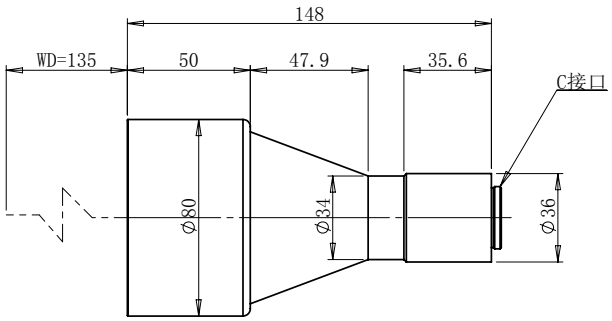

DTLW140-12X

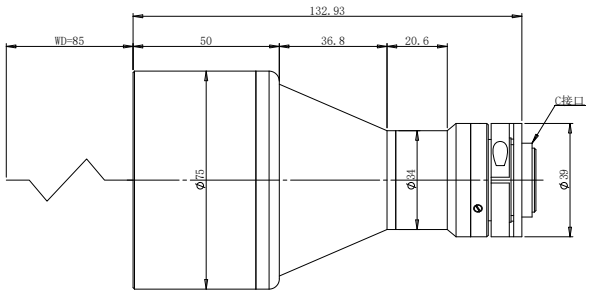

DTLW130-12X

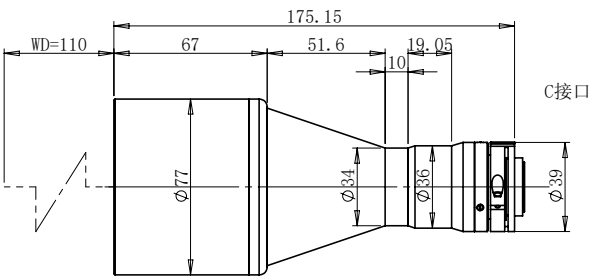

DTLW120-12X

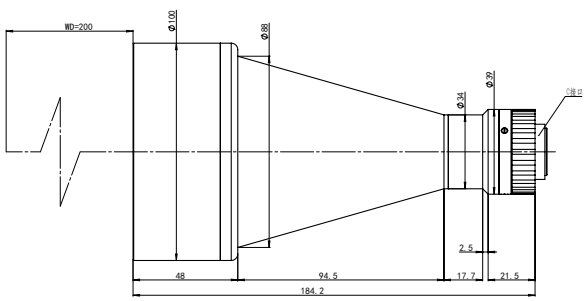

DTLW090-12X

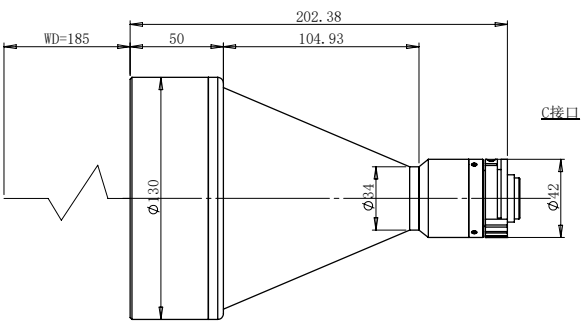

DTLW080-12X

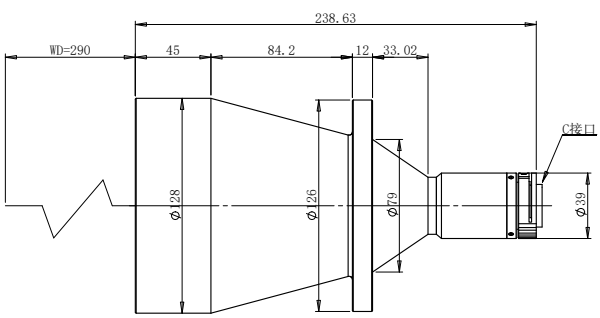

DTLW070-12X

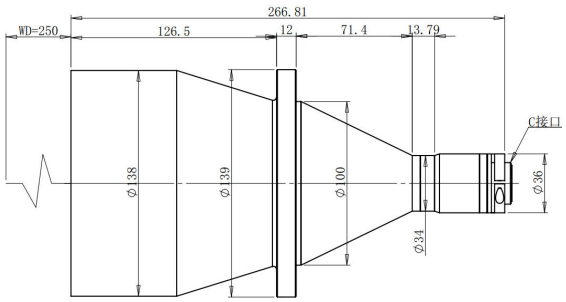

DTLW060-12X

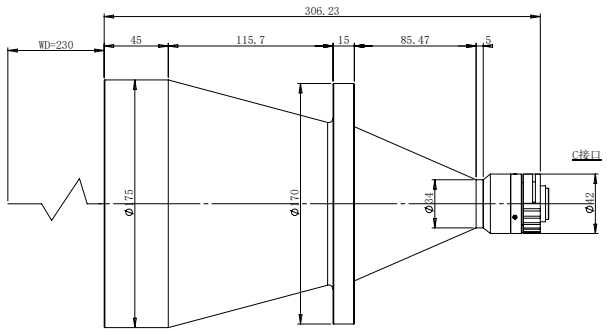

DTLW050-12X

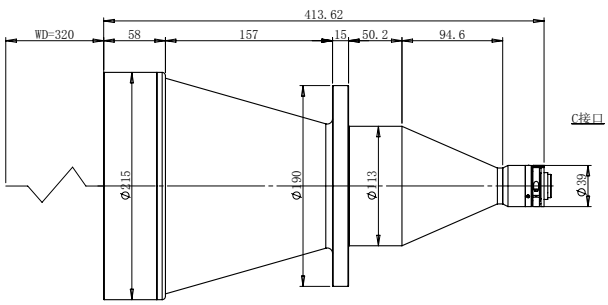

DTLW040-12X

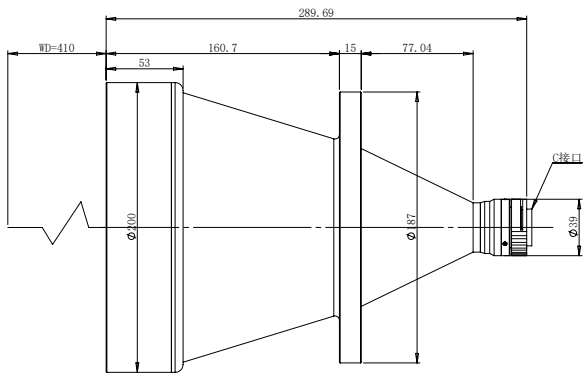

DTLW030-12X

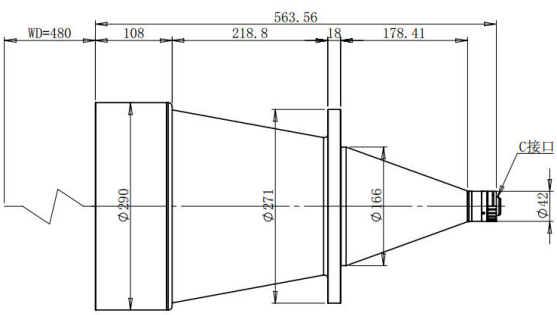

DTLW026-12X

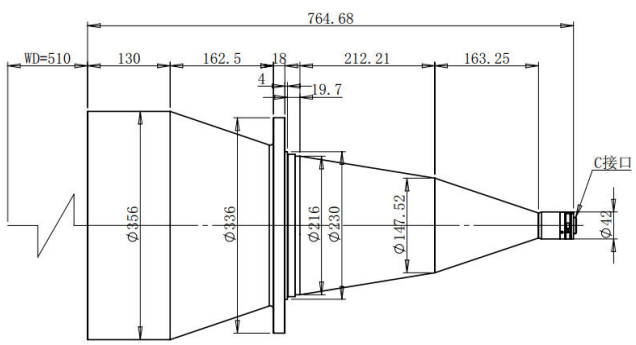

DTLW-118X 系列

最高支持 1/1.8"靶面相机

镜头型号	物方视场 FOV (Φmm)	放大倍率 β(x)	物方工作距 WD(mm)	支持 CCD 尺寸 (Φmm)	像方最佳 F/#	像方 MTF30 (lp/mm)	物方最大景深 DOF(mm)	像方畸变 (% max)	物方远心度 (° max)	物像距 I/O (mm)	镜头总长 (mm)	相机接口
DTLW540-118X	16	0.540	28±1	9.0(1/1.8")	4.7	>150	1.3	<0.1	<0.1	109±1	63.6	C
DTLW400-118X	22	0.400	65±1	9.0(1/1.8")	4.7	>150	2.4	<0.1	<0.1	191±2	109.4	C
DTLW300-118X	30	0.300	65±1	9.0(1/1.8")	4.7	>150	4.3	<0.1	<0.1	186±3	103.7	C
DTLW260-118X	34	0.260	108±3	9.0(1/1.8")	4.7	>150	5.7	<0.1	<0.1	257±3	132.1	C
DTLW220-118X	40	0.220	120±3	9.0(1/1.8")	4.7	>150	8.0	<0.1	<0.1	250±3	112.7	C
DTLW190-118X	47	0.190	125±3	9.0(1/1.8")	4.7	>150	10.7	<0.1	<0.1	272±3	129.99	C
DTLW163-118X	55	0.163	140±3	9.0(1/1.8")	4.7	>150	14.5	<0.1	<0.1	302±3	144.7	C
DTLW135-118X	66	0.135	128±3	9.0(1/1.8")	4.7	>150	21.2	<0.1	<0.1	298±4	153.1	C
DTLW126-118X	71	0.126	150±3	9.0(1/1.8")	4.7	>150	24.4	<0.1	<0.1	330±3	162.8	C
DTLW125-118X	72	0.125	200±4	9.0(1/1.8")	4.7	>150	24.8	<0.1	<0.1	399±4	181.67	C
DTLW110-118X	81	0.110	225±4	9.0(1/1.8")	4.7	>150	32.0	<0.1	<0.1	421±4	179.11	C
DTLW082-118X	109	0.082	250±5	9.0(1/1.8")	4.7	>150	57.6	<0.1	<0.1	521±5	254.2	C
DTLW075-118X	120	0.075	300±5	9.0(1/1.8")	4.7	>150	68.9	<0.1	<0.1	591±5	274.31	C
DTLW060-118X	150	0.060	320±5	9.0(1/1.8")	4.7	>150	107.7	<0.1	<0.1	657±5	319.75	C
DTLW052-118X	173	0.052	335±5	9.0(1/1.8")	4.7	>150	143.4	<0.1	<0.1	783±5	431.06	C
DTLW046-118X	195	0.046	370±5	9.0(1/1.8")	4.7	>150	183.2	<0.1	<0.1	789±5	402.17	C
DTLW034-118X	264	0.034	390±5	9.0(1/1.8")	5.6	>195	404.4	<0.1	<0.1	972±5	565.14	C
DTLW030-118X	300	0.030	505±6	9.0(1/1.8")	4.4	>220	404.4	<0.1	<0.1	1311±6	789.08	C

DTLW540-118X

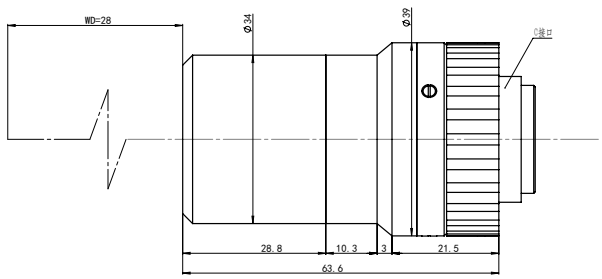

DTLW400-118X

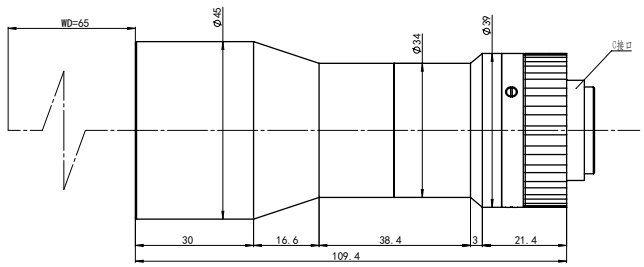

DTLW300-118X

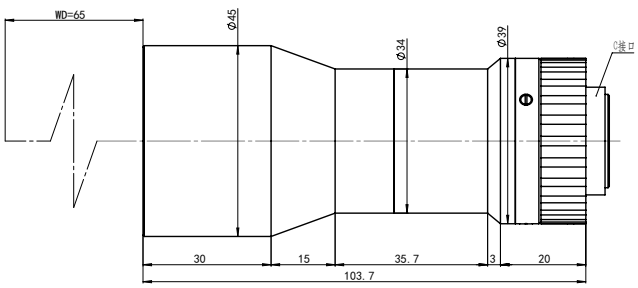

DTLW260-118X

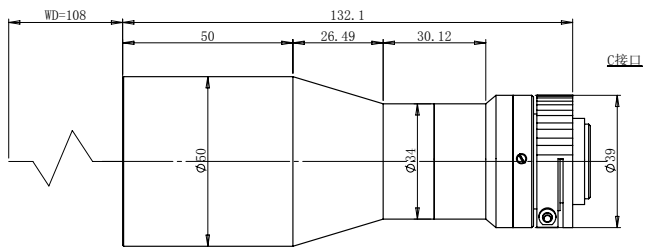

DTLW220-118X

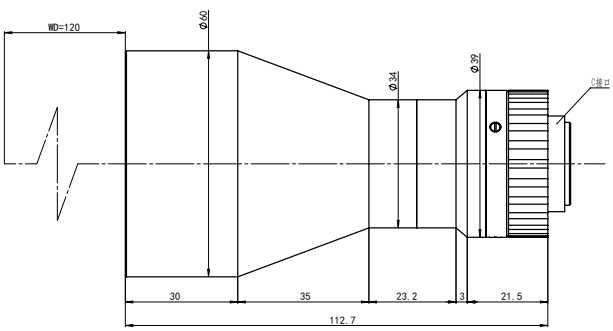

DTLW190-118X

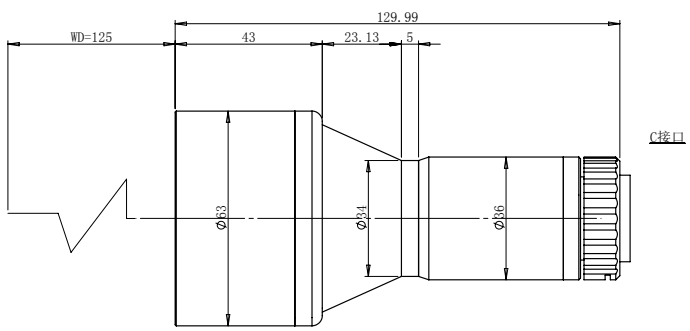

DTLW163-118X

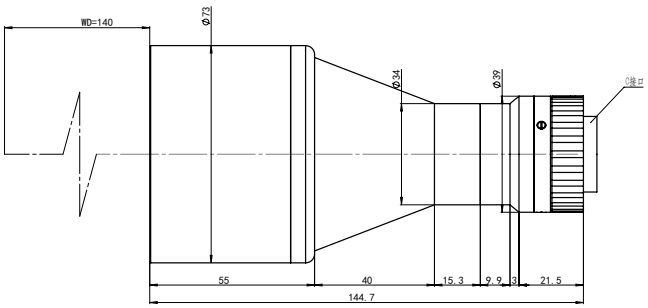

DTLW135-118X

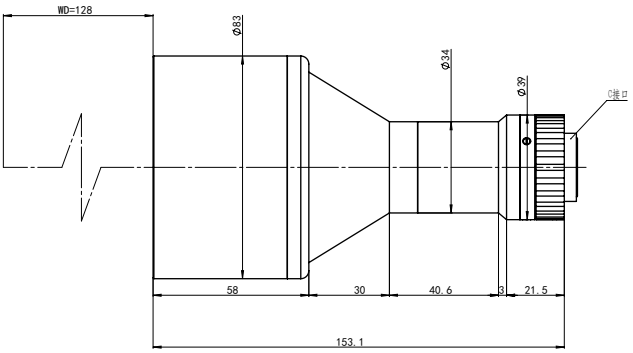

DTLW126-118X

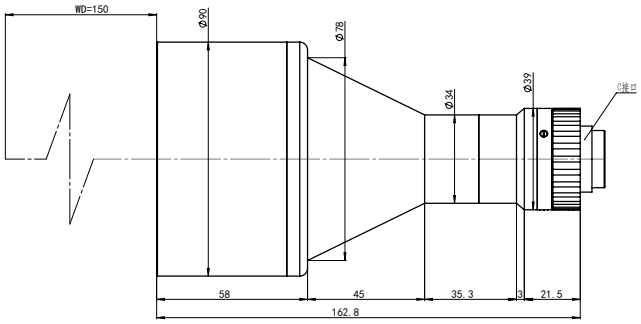

DTLW125-118X

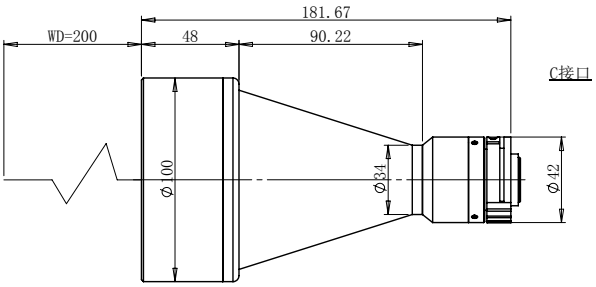

DTLW110-118X

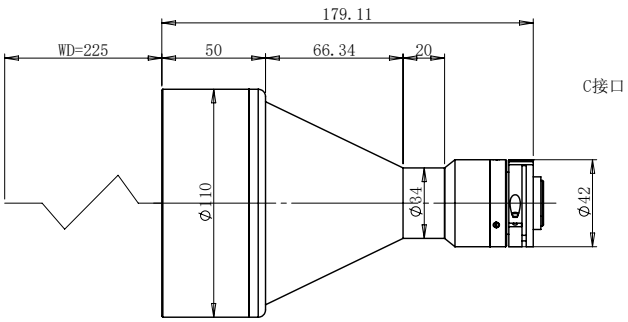

DTLW082-118X

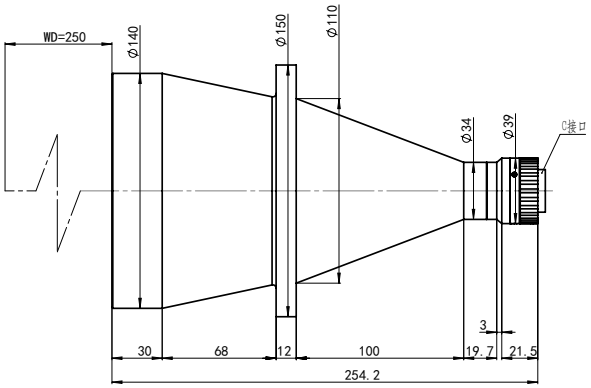

DTLW075-118X

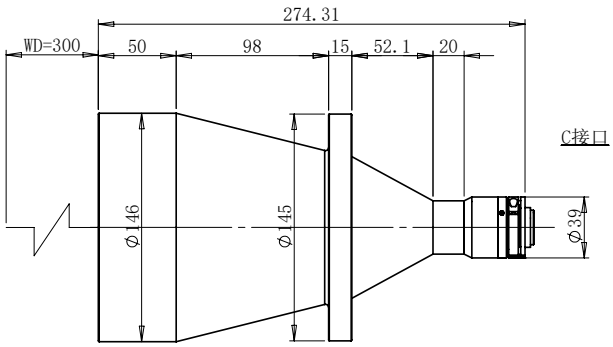

DTLW060-118X

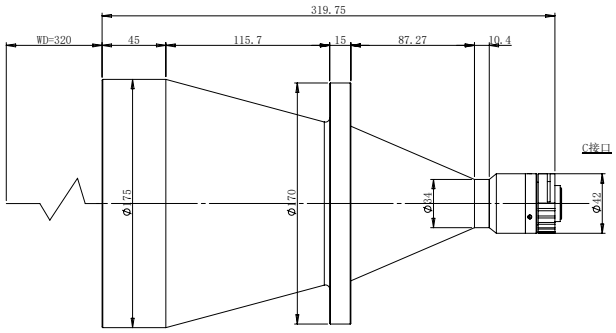

DTLW052-118X

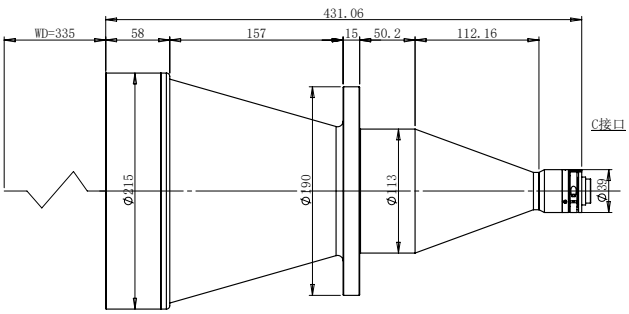

DTLW046-118X

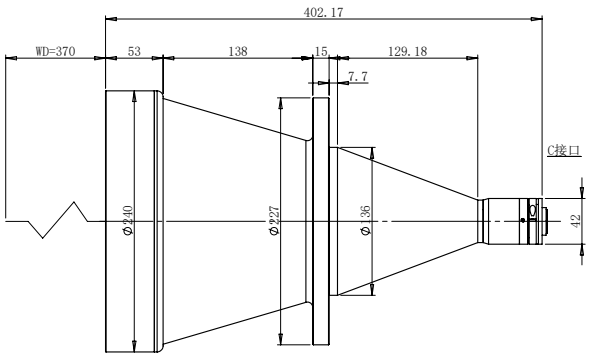

DTLW034-118X

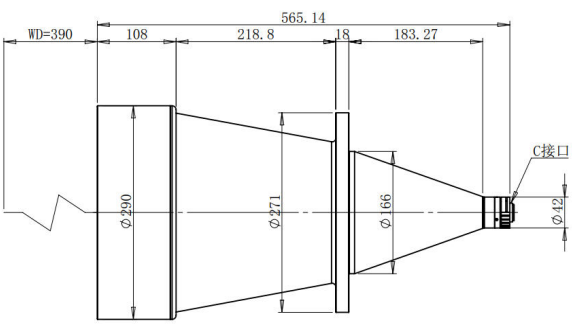

DTLW030-118X

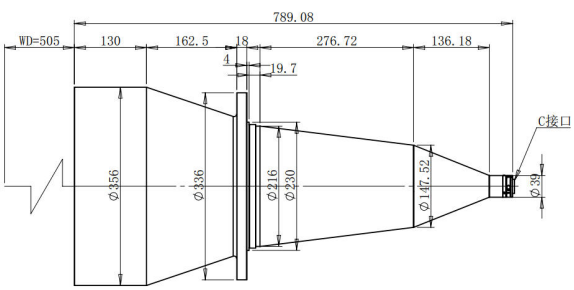

DTLW-23X 系列

最高支持 2/3"靶面相机

镜头型号	物方视场 FOV (Φmm)	放大倍率 β(x)	物方工作距 WD(mm)	支持 CCD 尺寸 (Φmm)	像方最佳 F/#	像方 MTF30 (lp/mm)	物方最大景深 DOF(mm)	像方畸变 (% max)	物方远心度 (° max)	物像距 I/O (mm)	镜头总长 (mm)	相机接口
DTLW660-23X	17	0.660	27±1	11.4(2/3")	4.8	>150	0.9	<0.1	<0.1	116±1	71.6	C
DTLW410-23X	27	0.410	85±1	11.4(2/3")	4.8	>150	2.3	<0.1	<0.1	245±2	142.8	C
DTLW400-23X	28	0.400	60±1	11.4(2/3")	4.8	>100	2.4	<0.1	<0.1	235±3	158	C
DTLW260-23X	43	0.260	130±3	11.4(2/3")	4.8	>150	5.8	<0.1	<0.1	267±3	120.2	C
DTLW230-23X	49	0.230	127±3	11.4(2/3")	4.8	>150	7.4	<0.1	<0.1	282±3	137.7	C
DTLW210-23X	54	0.210	90±2	11.4(2/3")	7.5	>120	14.0	<0.1	<0.1	245±3	137.5	C
DTLW190-23X	60	0.190	85±2	11.4(2/3")	4.8	>150	10.9	<0.1	<0.1	254±3	151.95	C
DTLW188-23X	60	0.188	110±3	11.4(2/3")	4.8	>150	11.2	<0.1	<0.1	276±4	148.71	C
DTLW140-23X	81	0.140	208±4	11.4(2/3")	4.8	>150	20.2	<0.1	<0.1	414±4	189.1	C
DTLW130-23X	87	0.130	195±4	11.4(2/3")	4.8	>150	23.4	<0.1	<0.1	430±4	217.59	C
DTLW110-200-23X	103	0.110	200±4	11.4(2/3")	4.8	>150	32.7	<0.1	<0.1	472±4	255.3	C
DTLW110H-270-23X	103	0.110	270±5	11.4(2/3")	4.8	>150	32.7	<0.1	<0.1	561±5	273.6	C
DTLW100-23X	114	0.100	250±5	11.4(2/3")	4.8	>150	39.6	<0.1	<0.1	537±5	270.37	C
DTLW090-23X	126	0.090	300±5	11.4(2/3")	4.8	>150	48.8	<0.1	<0.1	601±5	283.6	C
DTLW060-23X	190	0.060	480±6	11.4(2/3")	4.8	>150	110.0	<0.1	<0.1	994±6	496.74	C

DTLW660-23X

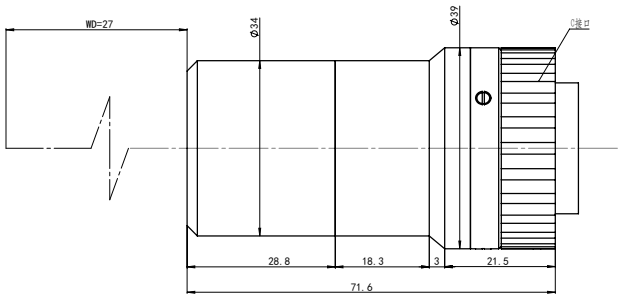

DTLW410-23X

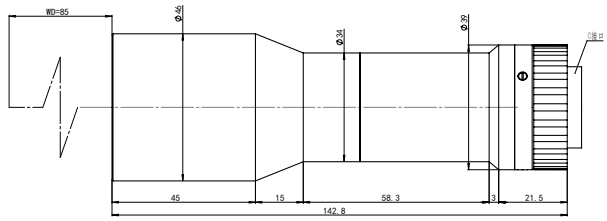

DTLW400-23X

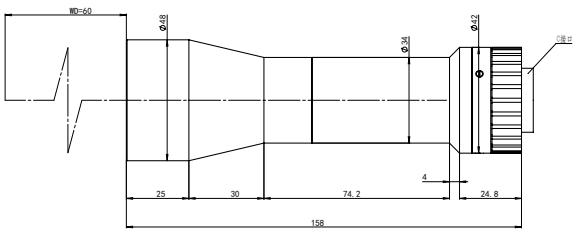

DTLW260-23X

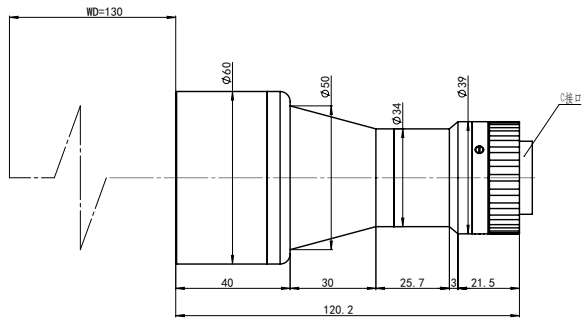

DTLW230-23X

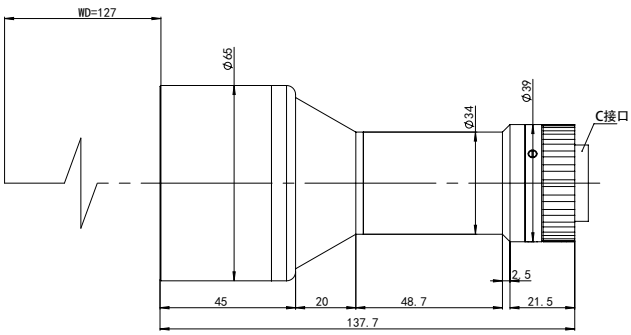

DTLW210-23X

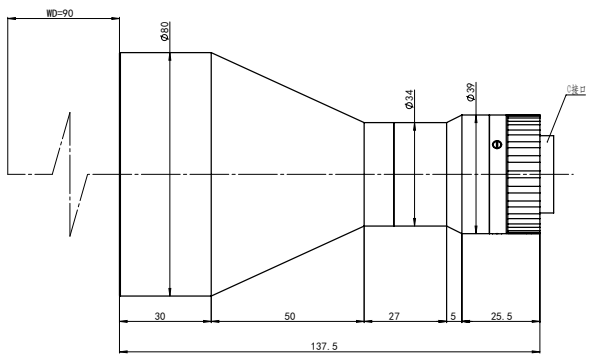

DTLW190-23X

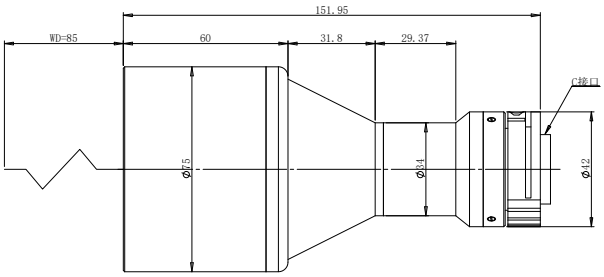

DTLW188-23X

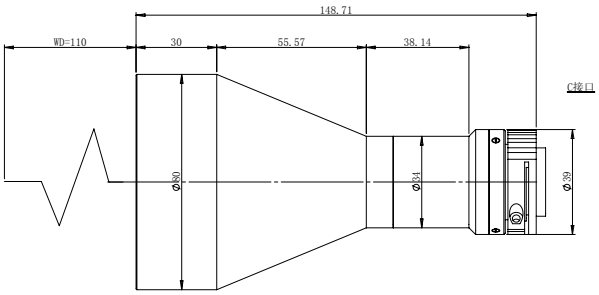

DTLW140-23X

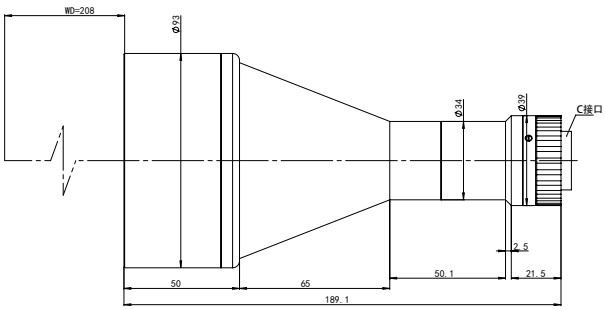

DTLW130-23X

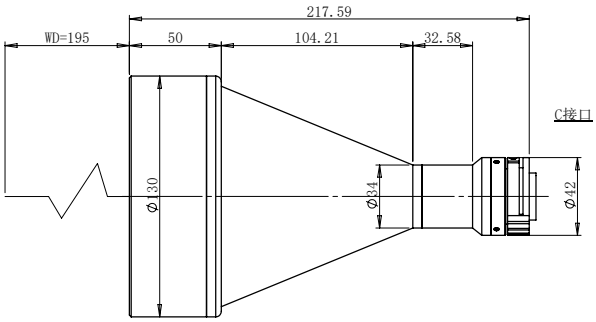

DTLW110-200-23X

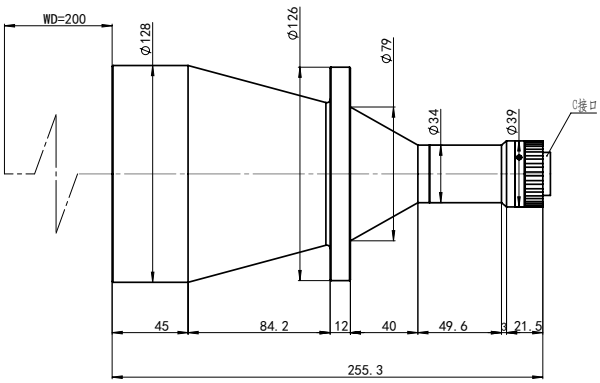

DTLW110H-270-23X

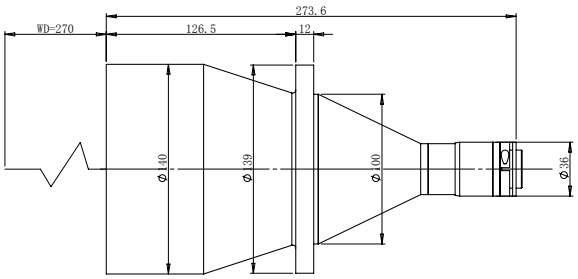

DTLW100-23X

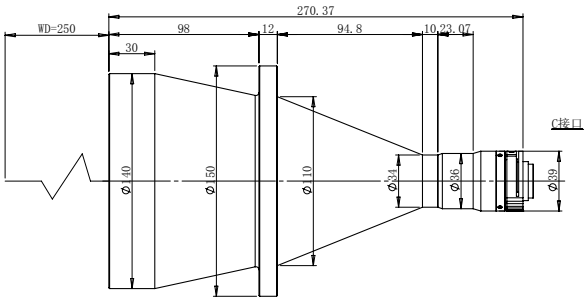

DTLW090-23X

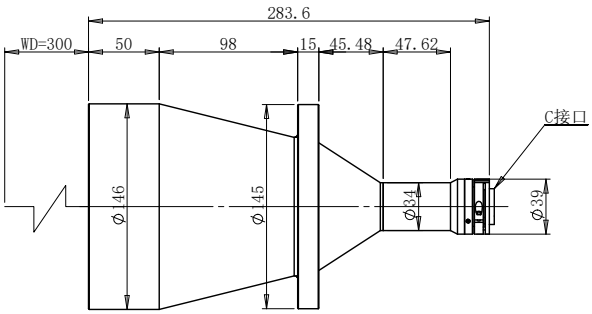

DTLW060-23X

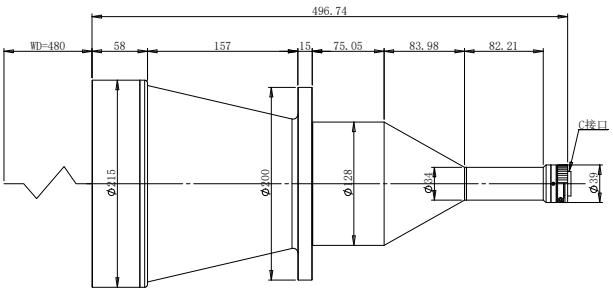

DTLW-1X 系列

最高支持 1"靶面相机

镜头型号	物方视场 FOV (Φmm)	放大倍率 β(x)	物方工作距 WD(mm)	支持 CCD 尺寸 (Φmm)	像方最佳 F/#	像方 MTF30 (lp/mm)	物方最大景深 DOF(mm)	像方畸变 (% max)	物方远心度 (° max)	物像距 I/O (mm)	镜头总长 (mm)	相机接口
DTLW100-1X	16	0.100	28±1	16.6(1")	6.5	>150	0.5	<0.1	<0.1	139±1	93.8	C
DTLW660-1X	25	0.660	110±2	16.6(1")	6.5	>150	1.2	<0.1	<0.1	256±2	129.16	C
DTLW600-1X	27	0.600	90±1	16.6(1")	12	>110	2.7	<0.1	<0.1	230±3	122.75	C
DTLW500-1X	33	0.500	115±3	16.6(1")	6.5	>150	2.1	<0.1	<0.1	275±3	142.86	C
DTLW440-1X	37	0.440	140±3	16.6(1")	7.3	>120	3.1	<0.1	<0.1	304±3	147.2	C
DTLW400-1X	41	0.400	65±1	16.6(1")	6.5	>150	3.3	<0.1	<0.1	241±3	159	C
DTLW377-1X	44	0.377	82±2	16.6(1")	6.5	>150	3.7	<0.1	<0.1	235±3	135.72	C
DTLW359-1X	46	0.359	120±3	16.6(1")	6.5	>150	4.1	<0.1	<0.1	288±4	150.8	C
DTLW350-1X	47	0.350	140±3	16.6(1")	6.5	>150	4.3	<0.1	<0.1	311±3	153.9	C
DTLW300-1X	55	0.300	145±3	16.6(1")	6.5	>150	5.9	<0.1	<0.1	338±4	176.43	C
DTLW250-1X	66	0.250	200±4	16.6(1")	6.5	>150	8.5	<0.1	<0.1	387±4	170.41	C
DTLW240-1X	69	0.240	175±3	16.6(1")	6.5	>150	9.3	<0.1	<0.1	406±5	214.42	C
DTLW230-1X	72	0.230	143±5	16.6(1")	6.5	>150	10.1	<0.1	<0.1	342±5	181.89	C
DTLW203-1X	81	0.203	228±5	16.6(1")	6.5	>150	13.0	<0.1	<0.1	446±5	200.5	C
DTLW200-1X	83	0.200	280±4	16.6(1")	6.5	>150	13.4	<0.1	<0.1	496±5	198.89	C
DTLW184-1X	90	0.184	200±4	16.6(1")	6.5	>150	15.8	<0.1	<0.1	451±5	233.56	C
DTLW172-1X	96	0.172	250±4	16.6(1")	6.5	>150	18.1	<0.1	<0.1	557±5	290.2	C
DTLW163-1X	101	0.163	270±5	16.6(1")	6.5	>150	20.1	<0.1	<0.1	546±6	259.4	C

DTLW100-1X

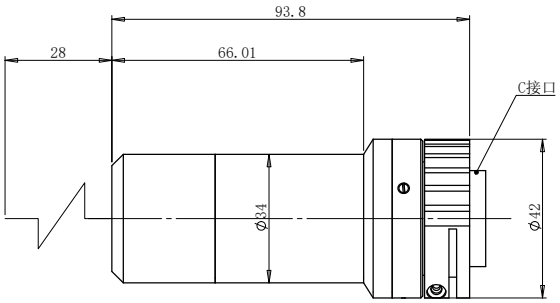

DTLW660-1X

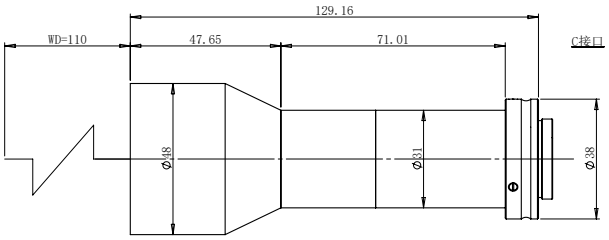

DTLW600-1X

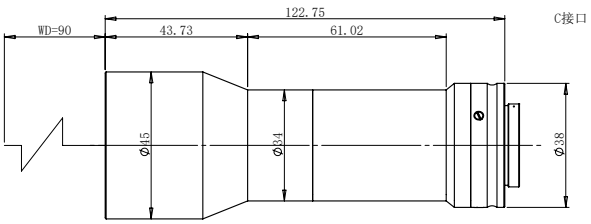

DTLW500-1X

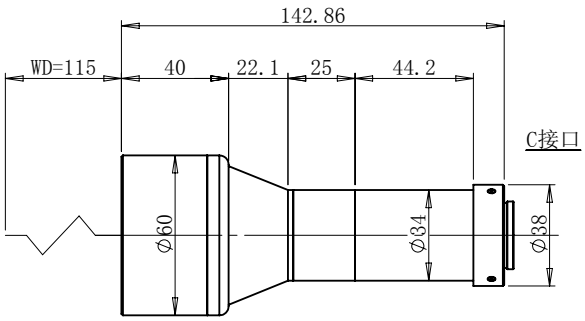

DTLW440-1X

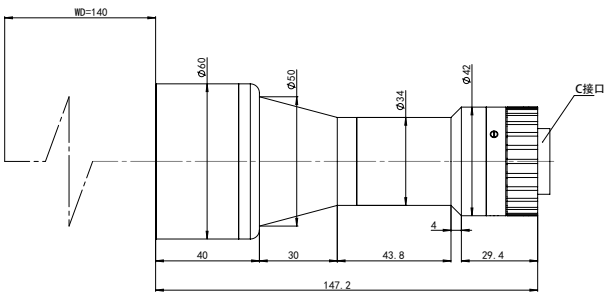

DTLW400-1X

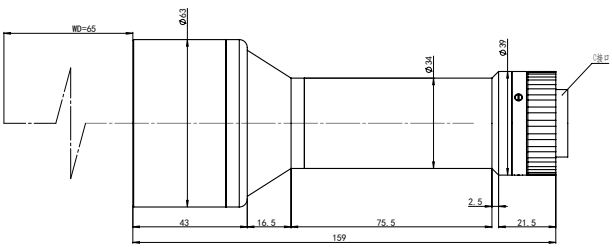

DTLW377-1X

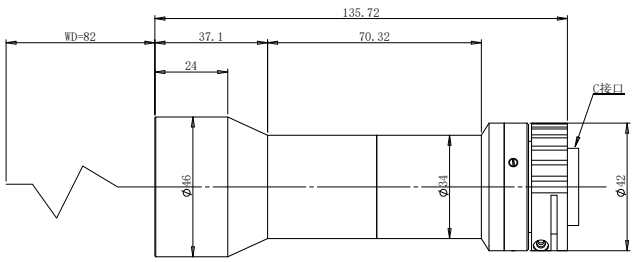

DTLW359-1X

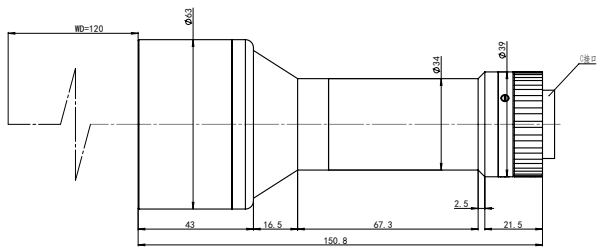

DTLW350-1X

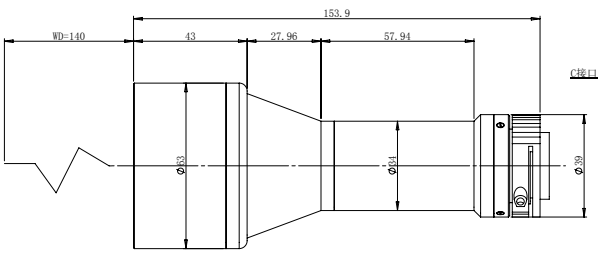

DTLW300-1X

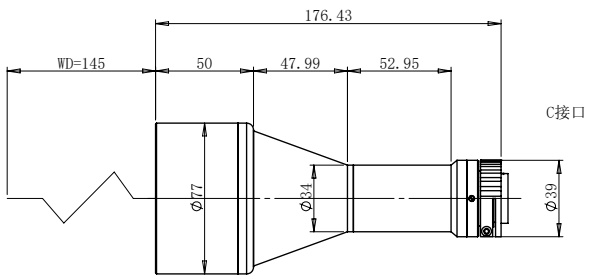

DTLW250-1X

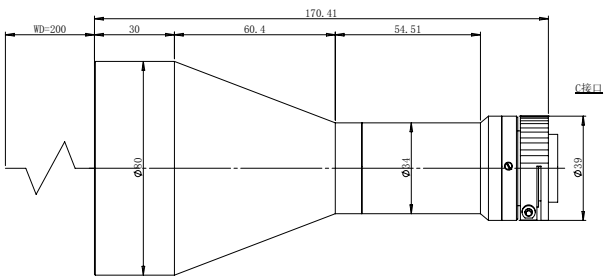

DTLW240-1X

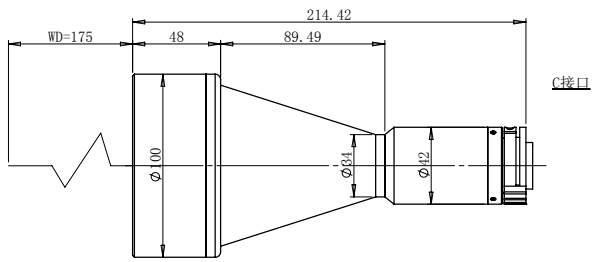

DTLW230-1X

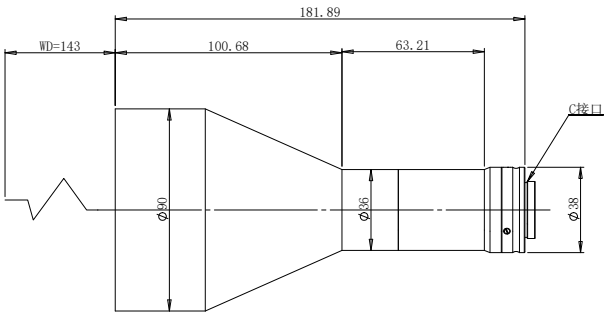

DTLW203-1X

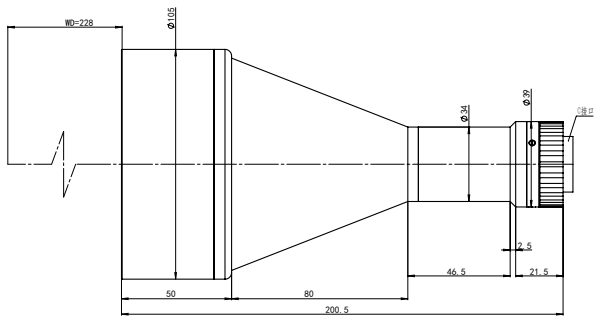

DTLW200-1X

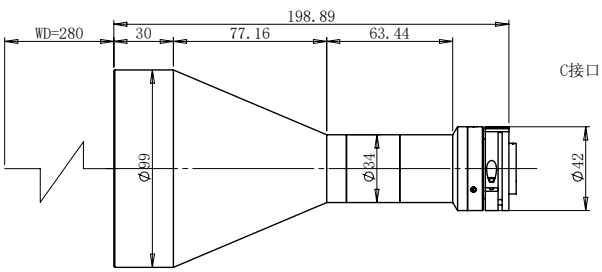

DTLW184-1X

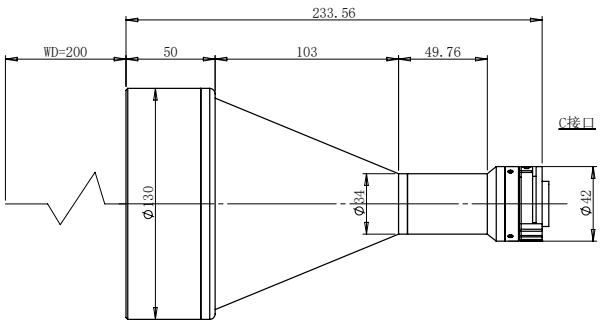

DTLW172-1X

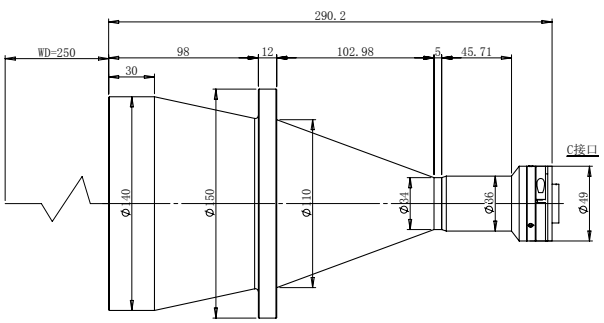

DTLW163-1X

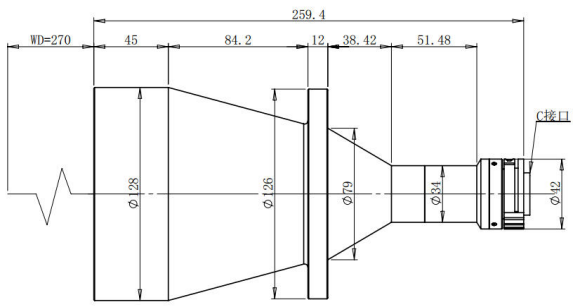

DTLW-11X 系列

最高支持 1.1"靶面相机

镜头型号	物方视场 FOV (Φmm)	放大倍率 β(x)	物方工作距 WD(mm)	支持 CCD 尺寸 (Φmm)	像方最佳 F/#	像方 MTF30 (lp/mm)	物方最大景深 DOF(mm)	像方畸变 (% max)	物方远心度 (° max)	物像距 I/O (mm)	镜头总长 (mm)	相机接口
DTLW700-11X	26	0.700	70±1	18.4(1.1")	7.0	>120	1.1	<0.05	<0.1	229±1	141.93	C
DTLW500H-11X	36	0.500	110±2	18.4(1.1")	6.8	>150	2.2	<0.1	<0.1	280±2	152.75	C
DTLW400-11X	46	0.400	115±2	18.4(1.1")	7.4	>120	3.8	<0.1	<0.1	275±3	142.49	C
DTLW350-11X	52	0.350	130±3	18.4(1.1")	6.8	>150	4.5	<0.1	<0.1	307±3	159.63	C
DTLW326-11X	56	0.326	135±3	18.4(1.1")	6.8	>120	5.2	<0.1	<0.1	341±3	189.02	C
DTLW300H-11X	61	0.300	110±3	18.4(1.1")	11.0	>100	10.0	<0.1	<0.1	323±3	195.81	C
DTLW280-11X	65	0.280	150±4	18.4(1.1")	6.8	>150	7.1	<0.1	<0.1	413±4	245.58	C
DTLW240-11X	76	0.240	100±3	18.4(1.1")	6.8	>150	9.7	<0.1	<0.1	286±3	168.7	C
DTLW220H-11X	83	0.220	220±4	18.4(1.1")	6.8	>150	11.5	<0.1	<0.1	443±5	206.24	C
DTLW200-11X	92	0.200	230±4	18.4(1.1")	6.8	>150	14.0	<0.1	<0.1	489±4	242.1	C
DTLW190-11X	96	0.190	200±5	18.4(1.1")	6.8	>150	15.4	<0.1	<0.1	464±5	247.13	C
DTLW180-11X	102	0.180	280±5	18.4(1.1")	6.8	>150	17.3	<0.1	<0.1	572±5	274.8	C
DTLW168-11X	109	0.168	260±5	18.4(1.1")	4.9	>180	14.4	<0.1	<0.1	570±5	293	C
DTLW158-11X	116	0.158	250±5	18.4(1.1")	6.8	>150	22.4	<0.1	<0.1	568±5	300.8	C
DTLW100-11X	184	0.100	300±5	18.4(1.1")	6.8	>150	56.1	<0.1	<0.1	748±5	431.33	C
DTLW077-11X	238	0.077	400±5	18.4(1.1")	6.8	>150	94.6	<0.1	<0.1	988±5	570.88	C
DTLW071-11X	259	0.071	410±6	18.4(1.1")	6.8	>150	111.2	<0.1	<0.1	1063±6	636.14	C

DTLW700-11X

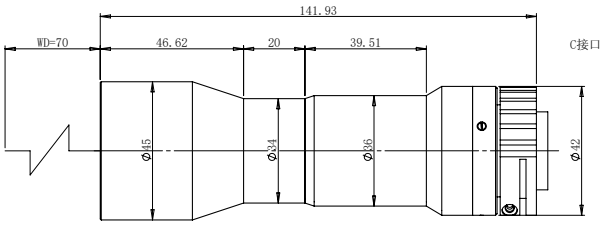

DTLW500H-11X

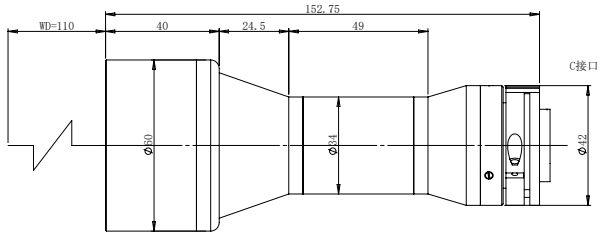

DTLW400-11X

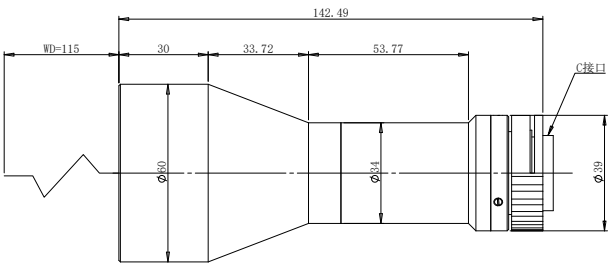

DTLW350-11X

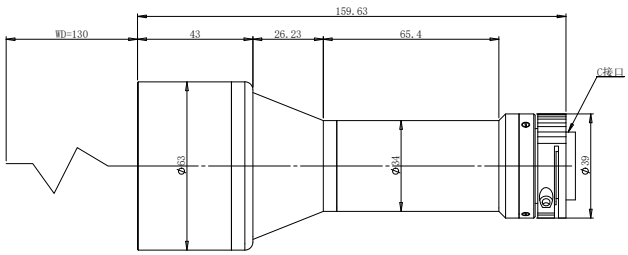

DTLW326-11X

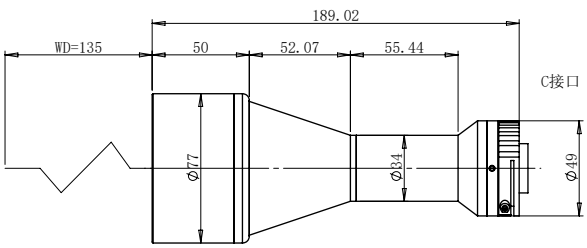

DTLW300H-11X

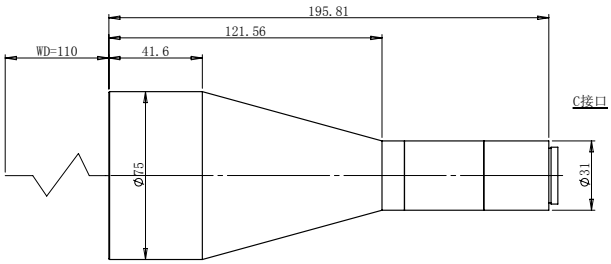

DTLW280-11X

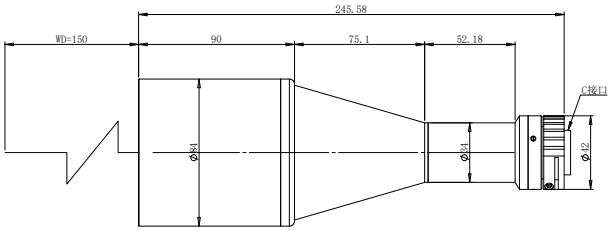

DTLW240-11X

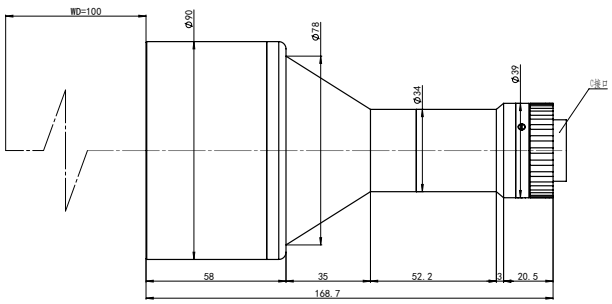

DTLW220H-11X

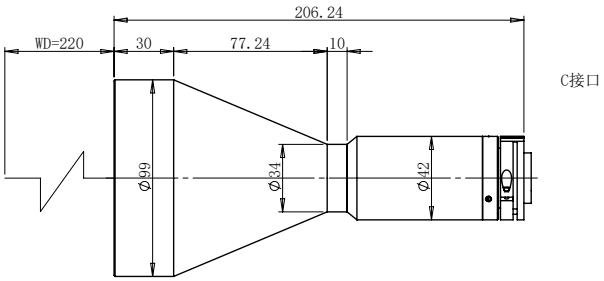

DTLW200-11X

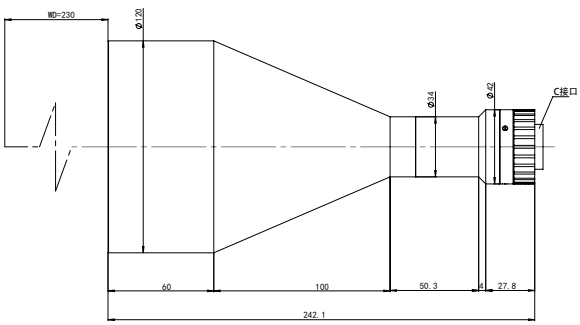

DTLW190-11X

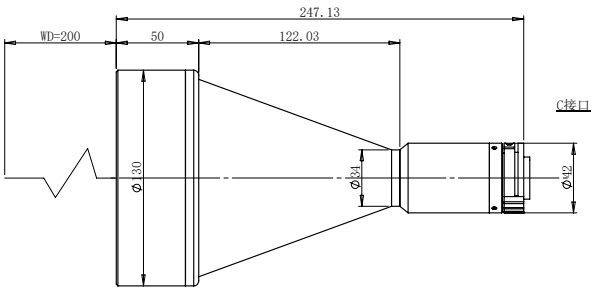

DTLW180-11X

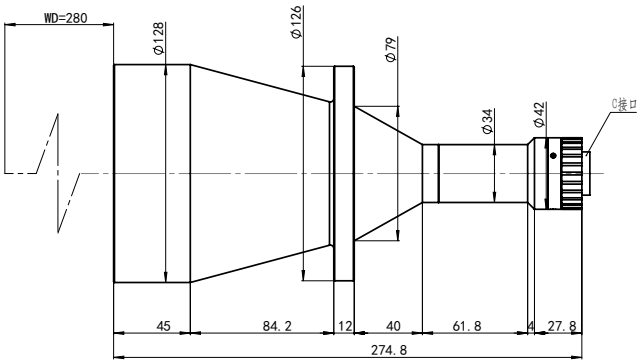

DTLW168-11X

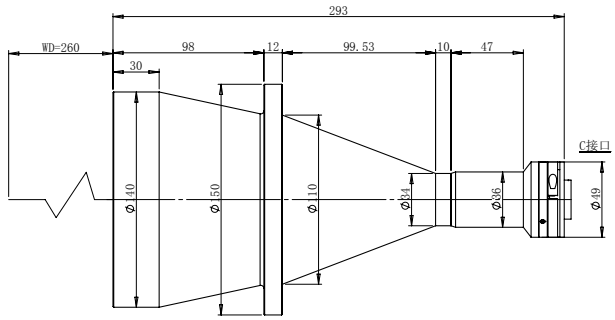

DTLW158-11X

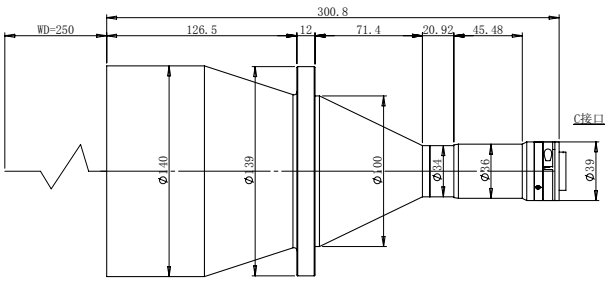

DTLW100-11X

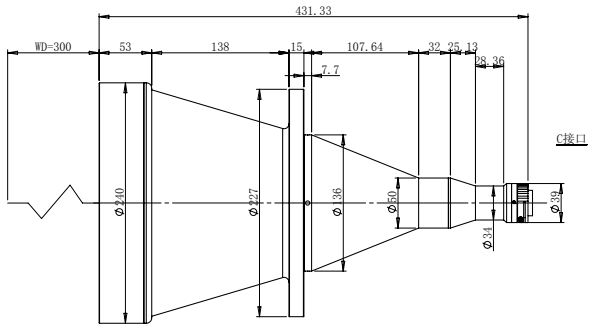

DTLW077-11X

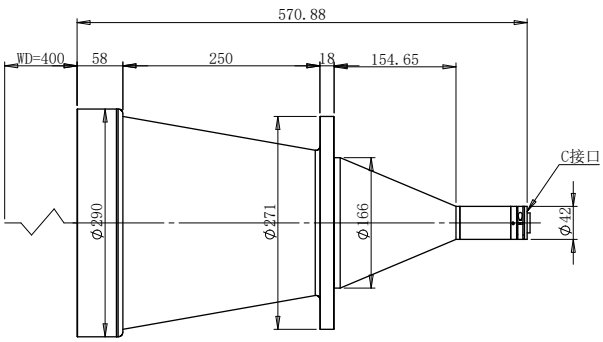

DTLW071-11X

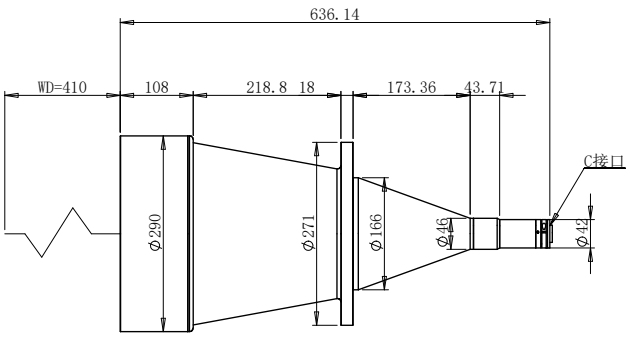

RTLP-12 系列

最高支持 1/2"靶面相机

镜头型号	物方视场 FOV (Φmm)	放大倍率 β(x)	物方工作距 WD(mm)	支持 CCD 尺寸 (Φmm)	像方最佳 F/#	像方 MTF30 (lp/mm)	物方最大景深 DOF(mm)	像方畸变 (% max)	物方远心度 (° max)	物像距 I/O (mm)	镜头总长 (mm)	相机接口
RTLP218-12	36	0.218	110±2	8.0(1/2")	5.5	>185	12.8	<0.1	<0.1	217±2	107.7	C
RTLP178-12	44	0.178	120±2	8.0(1/2")	5.5	>185	19.3	<0.1	<0.1	259±2	139.8	C
RTLP146-12	54	0.146	138±2	8.0(1/2")	5.5	>185	28.9	<0.1	<0.1	320±3	182.8	C
RTLP123-12	65	0.123	160±2	8.0(1/2")	5.5	>185	40.4	<0.1	<0.1	358±3	198.5	C
RTLP100-12	80	0.100	180±2	8.0(1/2")	5.5	>160	60.1	<0.1	<0.1	413±4	233.1	C
RTLP087-12	91	0.0874	250±3	8.0(1/2")	5.5	>185	79.8	<0.1	<0.1	507±5	257.8	C
RTLP072-12	110	0.0727	250±3	8.0(1/2")	5.5	>185	115.9	<0.1	<0.1	557±5	307.1	C
RTLP065-12	121	0.0656	260±3	8.0(1/2")	5.5	>185	142.1	<0.1	<0.1	605±5	345.7	C
RTLP058-12	136	0.0585	280±4	8.0(1/2")	5.5	>185	179.9	<0.1	<0.1	633±5	353.7	C
RTLP052-12	151	0.0528	320±5	8.0(1/2")	5.5	>185	218.8	<0.1	<0.1	712±5	392.8	C
RTLP044-12	181	0.044	398±5	8.0(1/2")	5.5	>185	314.3	<0.1	<0.1	838±5	440.7	C
RTLP041-12	194	0.0411	400±5	8.0(1/2")	5.5	>185	358.7	<0.1	<0.1	867±5	467.2	C
RTLP033-12	238	0.0336	410±5	8.0(1/2")	5.5	>185	512.8	<0.1	<0.1	1025±5	615.2	C
RTLP029-12	267	0.0299	410±5	8.0(1/2")	5.5	>185	634.2	<0.1	<0.1	1083±5	673.8	C
RTLP025-12	310	0.0258	500±6	8.0(1/2")	5.5	>185	872.5	<0.1	<0.1	1240±5	740.1	C
RTLP020-12	390	0.0205	700±5	8.0(1/2")	5.5	>185	1348.7	<0.1	<0.1	1732±5	1032.7	C

RTLP218-12

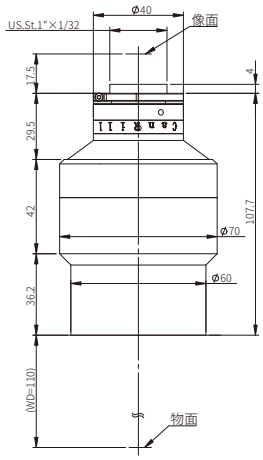

RTLP178-12

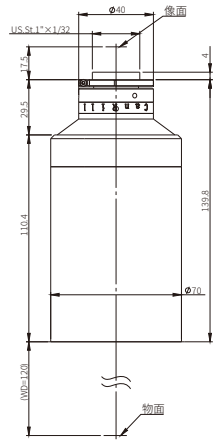

RTLP146-12

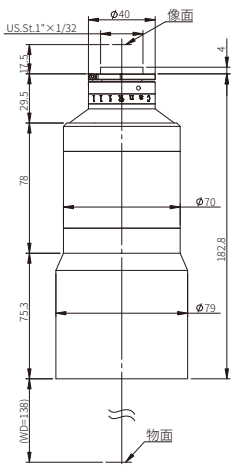

RTLP123-12

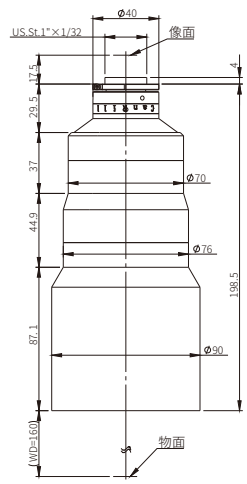

RTLP100-12

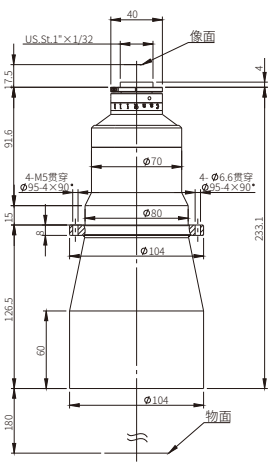

RTLP087-12

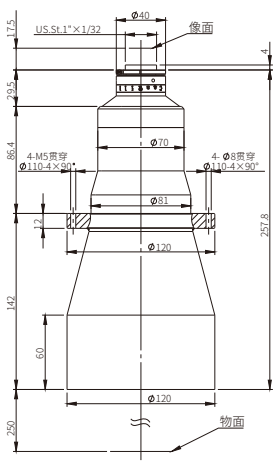

RTLP072-12

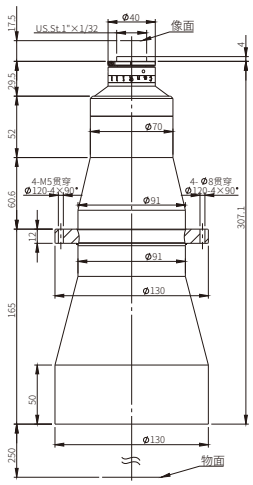

RTLP065-12

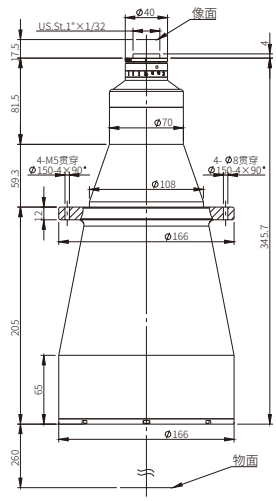

RTLP058-12

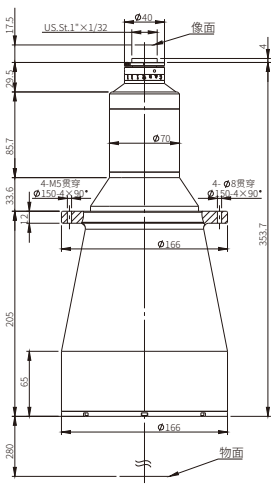

RTLP052-12

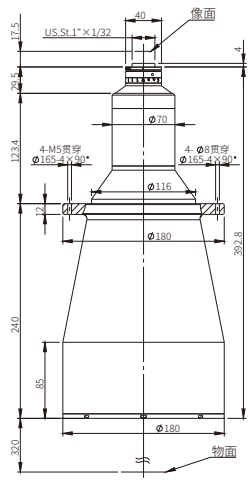

RTLP044-12

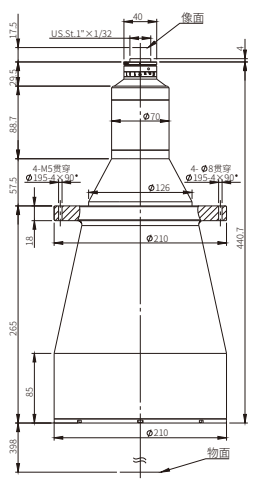

RTLP041-12

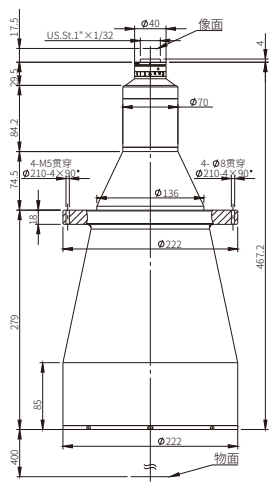

RTLP033-12

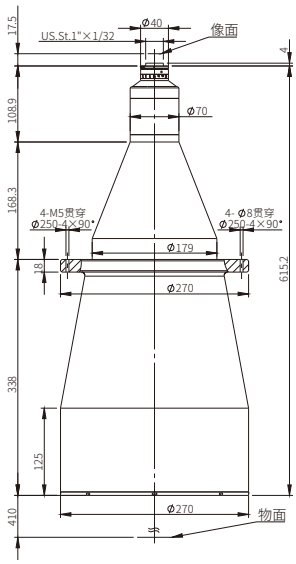

RTLP029-12

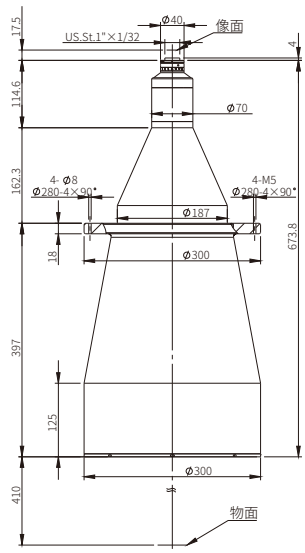

RTLP025-12

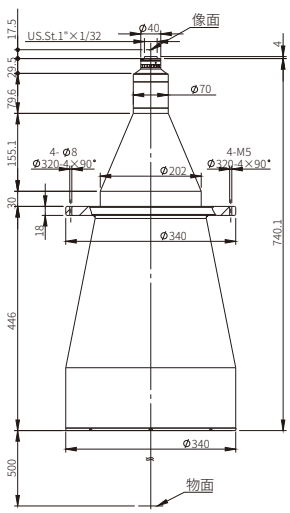

RTLP020-12

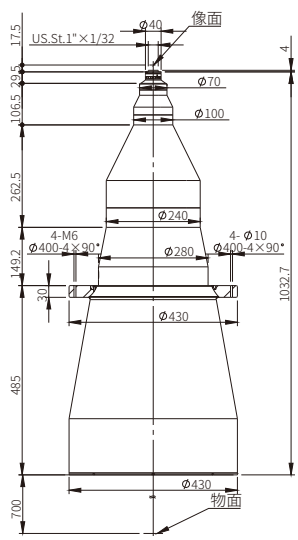

RTLP-23 系列

最高支持 2/3"靶面相机

镜头型号	物方视场 FOV (Φmm)	放大倍率 β(x)	物方工作距 WD(mm)	支持 CCD 尺寸 (Φmm)	像方最佳 F/#	像方 MTF30 (lp/mm)	物方最大景深 DOF(mm)	像方畸变 (% max)	物方远心度 (° max)	物像距 I/O (mm)	镜头总长 (mm)	相机接口
RTLP300G-23	36	0.300	110±2	11.0(2/3")	6.5-21.3	>130	8-26.2	<0.1	<0.1	231±1	121.7	C
RTLP244-23	45	0.244	120±2	11.0(2/3")	8	>165	14.8	<0.1	<0.1	273±3	153.9	C
RTLP200-23	55	0.200	138±3	11.0(2/3")	8	>180	22.0	<0.1	<0.1	334±3	196.8	C
RTLP169-23	65	0.169	160±3	11.0(2/3")	8	>175	30.8	<0.1	<0.1	372±3	212.5	C
RTLP138-23	79	0.138	180±3	11.0(2/3")	8	>170	46.5	<0.1	<0.1	427±4	247.1	C
RTLP120-23	91	0.120	250±4	11.0(2/3")	8	>130	60.9	<0.1	<0.1	521±4	271.9	C
RTLP100-23	110	0.100	250±4	11.0(2/3")	8	>130	88.2	<0.1	<0.1	571±4	321.1	C
RTLP090-23	122	0.090	260±4	11.0(2/3")	8	>130	108	<0.1	<0.1	619±4	359.8	C
RTLP080-23	137	0.080	280±4	11.0(2/3")	8	>130	136.2	<0.1	<0.1	647±4	367.8	C
RTLP072-23	151	0.0725	320±5	11.0(2/3")	8	>130	166.7	<0.1	<0.1	726±5	406.9	C
RTLP060-23	183	0.060	398±5	11.0(2/3")	8	>130	238.9	<0.1	<0.1	852±5	454.8	C
RTLP056-23	194	0.0565	400±5	11.0(2/3")	8	>130	273.0	<0.1	<0.1	881±5	481.2	C
RTLP046-23	238	0.0462	410±5	11.0(2/3")	8	>130	392.8	<0.1	<0.1	1039±6	629.3	C
RTLP041-23	267	0.0411	410±5	11.0(2/3")	8	>130	484.6	<0.1	<0.1	1097±6	687.9	C
RTLP035-23	309	0.0355	500±5	11.0(2/3")	8	>130	666.1	<0.1	<0.1	1254±6	754.2	C
RTLP031-23	349	0.0315	540±6	11.0(2/3")	8	>130	817.6	<0.1	<0.1	1366±6	826.4	C
RTLP028-23	390	0.0282	700±6	11.0(2/3")	8	>130	1028.8	<0.1	<0.1	1746±6	1046.7	C

RTLP300G-23

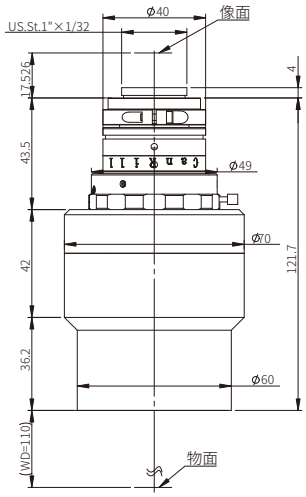

RTLP244-23

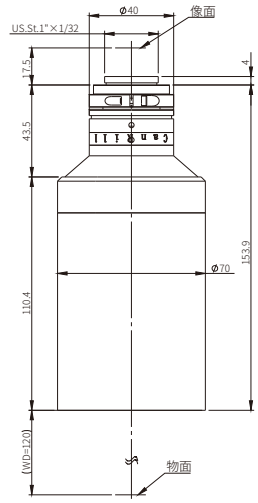

RTLP200-23

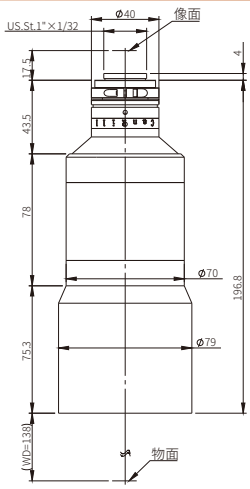

RTLP169-23

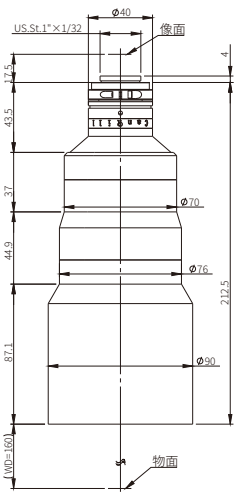

RTLP138-23

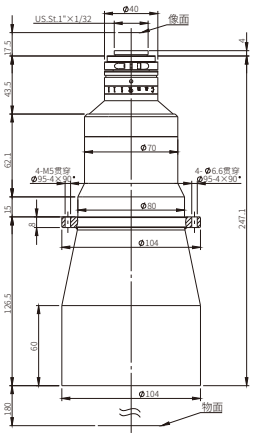

RTLP120-23

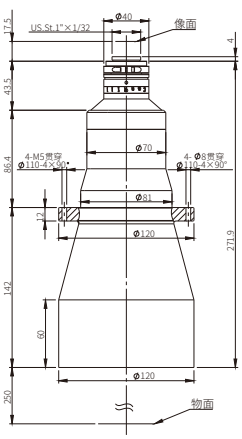

RTLP100-23

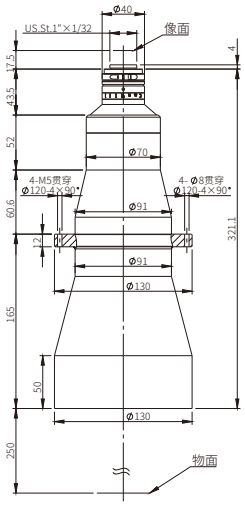

RTLP090-23

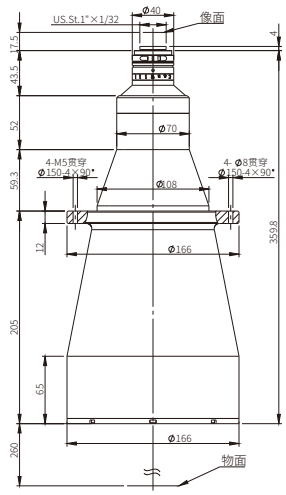

RTLP080-23

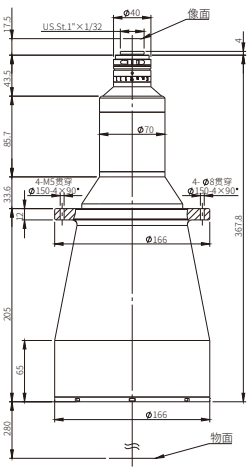

RTLP072-23

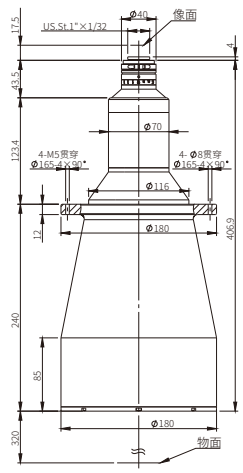

RTLP060-23

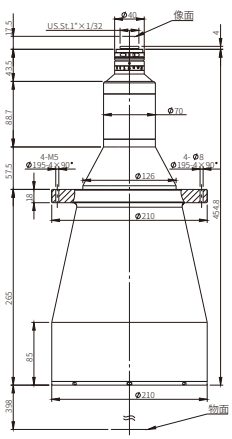

RTLP056-23

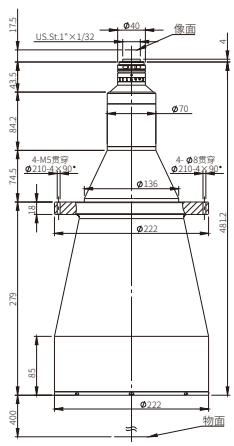

RTLP046-23

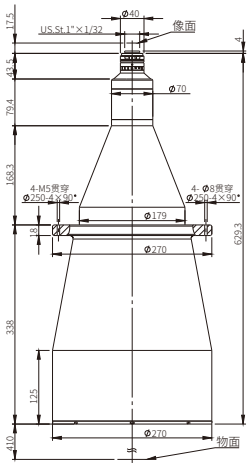

RTLP041-23

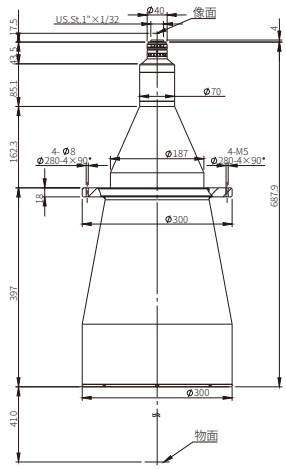

RTLP035-23

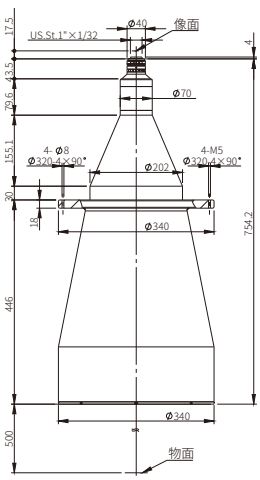

RTLP031-23

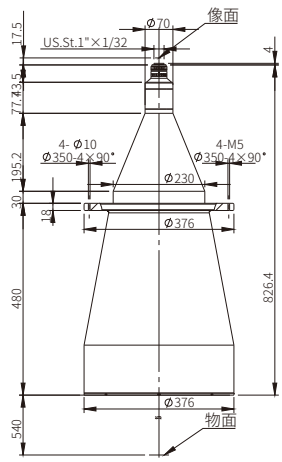

RTLP028-23

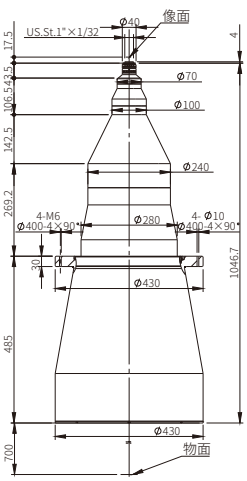

RTLP-1 系列

最高支持 1"靶面相机

镜头型号	物方视场 FOV (Φmm)	放大倍率 β(x)	物方工作距 WD(mm)	支持 CCD 尺寸 (Φmm)	像方最佳 F/#	像方 MTF30 (lp/mm)	物方最大景深 DOF(mm)	像方畸变 (% max)	物方远心度 (° max)	物像距 I/O (mm)	镜头总长 (mm)	相机接口
RTLP441G-1	36	0.441	110±2	16.2(1")	6.5-31.3	>160	3.7-17.9	<0.1	<0.1	254±3	144.9	C
RTLP359G-1	45	0.359	120±3	16.2(1")	6.5-31.3	>120	5.6-27	<0.1	<0.1	297±3	177.1	C
RTLP294-1	55	0.294	138±3	16.2(1")	6.5	>130	8.3	<0.1	<0.1	358±3	220.0	C
RTLP248-1	65	0.248	160±3	16.2(1")	6.5	>160	11.6	<0.1	<0.1	395±4	235.7	C
RTLP202-1	80	0.202	180±3	16.2(1")	6.5	>160	17.6	<0.1	<0.1	450±4	270.3	C
RTLP177-1	91	0.177	250±4	16.2(1")	6.5	>160	23.1	<0.1	<0.1	545±4	295.1	C
RTLP147-1	110	0.147	250±4	16.2(1")	6.5	>160	33.5	<0.1	<0.1	594±4	344.3	C
RTLP133-1	121	0.133	260±4	16.2(1")	6.5	>160	41.1	<0.1	<0.1	643±5	383.0	C
RTLP118-1	137	0.118	280±4	16.2(1")	6.5	>160	52.4	<0.1	<0.1	671±5	391.0	C
RTLP107-1	151	0.107	320±5	16.2(1")	6.5	>160	63.4	<0.1	<0.1	750±5	430.1	C
RTLP088-1	182	0.0888	398±5	16.2(1")	6.5	>160	91.2	<0.1	<0.1	876±5	478.0	C
RTLP083-1	195	0.083	400±5	16.2(1")	6.5	>160	104.3	<0.1	<0.1	904±5	504.4	C
RTLP067-1	238	0.0679	410±5	16.2(1")	6.5	>160	153.9	<0.1	<0.1	1062±5	652.5	C
RTLP060-1	268	0.0604	410±5	16.2(1")	6.5	>160	193.6	<0.1	<0.1	1121±5	711.1	C
RTLP052-1	310	0.0522	500±5	16.2(1")	6.5	>160	261.0	<0.1	<0.1	1277±5	777.4	C
RTLP041-1	390	0.0415	700±5	16.2(1")	6.5	>160	410.1	<0.1	<0.1	1769±5	1069.9	C

RTLP441G-1

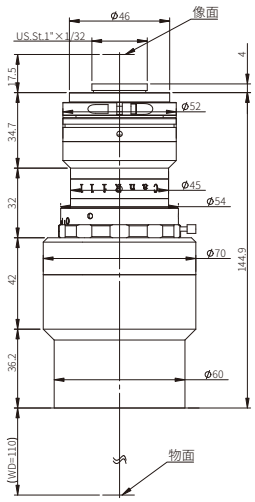

RTLP359G-1

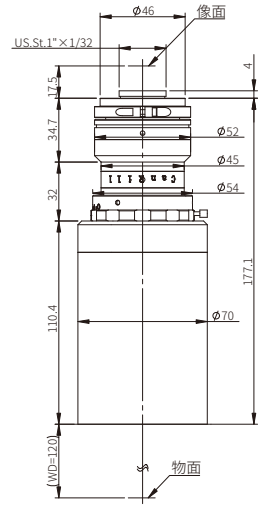

RTLP294-1

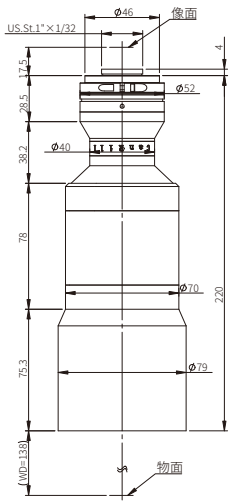

RTLP248-1

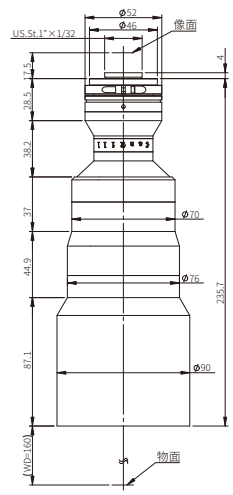

RTLP202-1

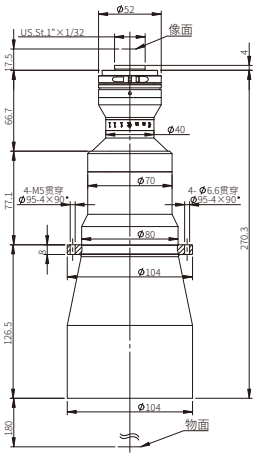

RTLP177-1

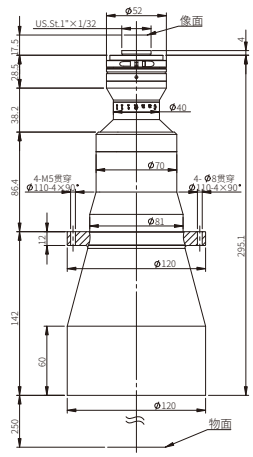

RTLP147-1

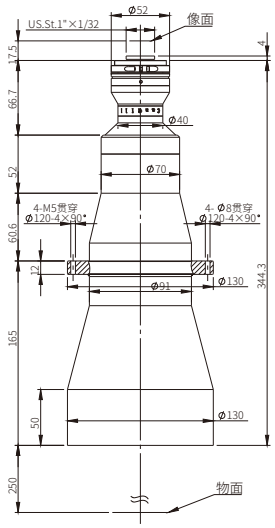

RTLP133-1

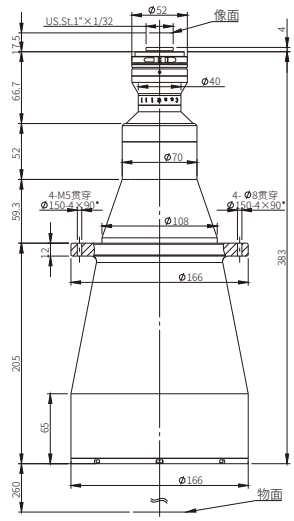

RTLP118-1

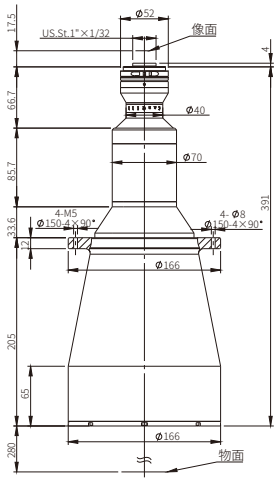

RTLP107-1

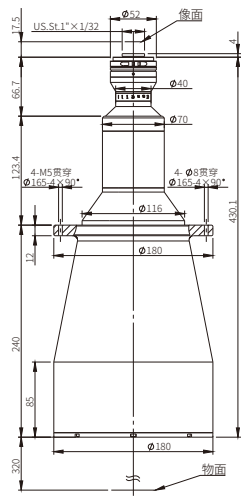

RTLP088-1

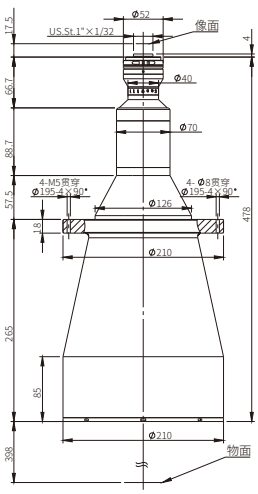

RTLP083-1

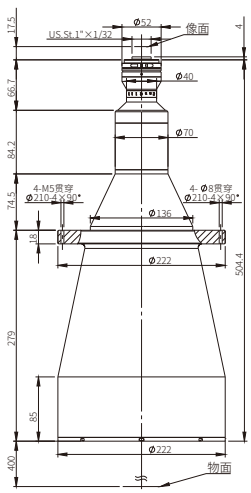

RTLP067-1

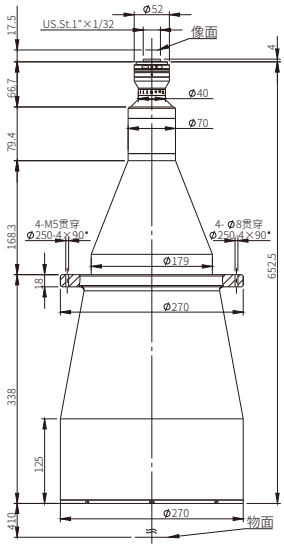

RTLP060-1

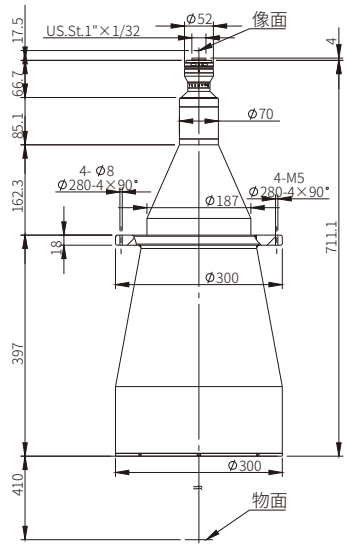

RTLP052-1

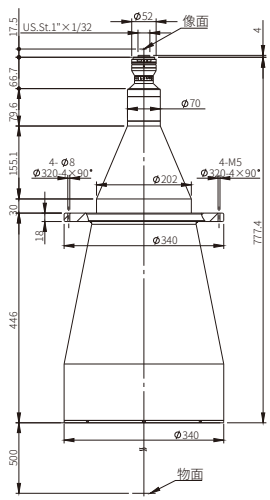

RTLP041-1

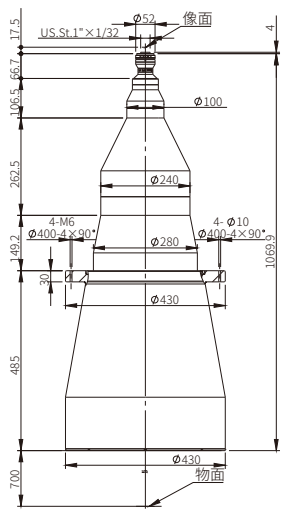

RTLP-11 系列

最高支持 1.1"靶面相机

镜头型号	物方视场 FOV (Φmm)	放大倍率 β(x)	物方工作距 WD(mm)	支持 CCD 尺寸 (Φmm)	像方最佳 F/#	像方 MTF30 (lp/mm)	物方最大景深 DOF(mm)	像方畸变 (% max)	物方远心度 (° max)	物像距 I/O (mm)	镜头总长 (mm)	相机接口
RTLP504G-11	36	0.504	110±2	18.5(1.1")	6.5-35.8	>130	2.8-15.6	<0.1	<0.1	264±2	154.8	C
RTLP411G-11	45	0.411	120±2	18.5(1.1")	6.5-35.8	>120	4.2-23.6	<0.1	<0.1	307±2	187.0	C
RTLP336G-11	55	0.336	138±3	18.5(1.1")	6.5-35.8	>130	6.3-35.2	<0.1	<0.1	367±3	229.9	C
RTLP284-11	65	0.284	160±3	18.5(1.1")	6.5	>150	8.8	<0.1	<0.1	405±4	245.6	C
RTLP231-11	80	0.231	180±3	18.5(1.1")	6.5	>160	13.4	<0.1	<0.1	460±4	280.2	C
RTLP202-11	91	0.202	250±4	18.5(1.1")	6.5	>160	17.5	<0.1	<0.1	555±4	305.0	C
RTLP168-11	110	0.168	250±4	18.5(1.1")	6.5	>160	25.4	<0.1	<0.1	604±5	354.2	C
RTLP152-11	121	0.152	260±4	18.5(1.1")	6.5	>160	31.2	<0.1	<0.1	652±5	392.9	C
RTLP135-11	137	0.135	280±4	18.5(1.1")	6.5	>160	39.4	<0.1	<0.1	680±5	400.9	C
RTLP122-11	151	0.122	320±5	18.5(1.1")	6.5	>160	48.2	<0.1	<0.1	760±5	440.0	C
RTLP102-11	181	0.102	398±5	18.5(1.1")	6.5	>160	69.5	<0.1	<0.1	885±5	487.8	C
RTLP095-11	194	0.095	400±6	18.5(1.1")	6.5	>160	79.4	<0.1	<0.1	914±6	514.3	C
RTLP077-11	238	0.0777	410±6	18.5(1.1")	6.5	>160	116.9	<0.1	<0.1	1072±6	662.4	C
RTLP069-11	267	0.0691	410±6	18.5(1.1")	6.5	>160	147.4	<0.1	<0.1	1131±6	721.0	C
RTLP059-11	309	0.0597	500±6	18.5(1.1")	6.5	>160	199.6	<0.1	<0.1	1287±6	787.3	C
RTLP047-11	389	0.0475	700±6	18.5(1.1")	6.5	>160	313.6	<0.1	<0.1	1779±6	1079.8	C

RTLP504G-11

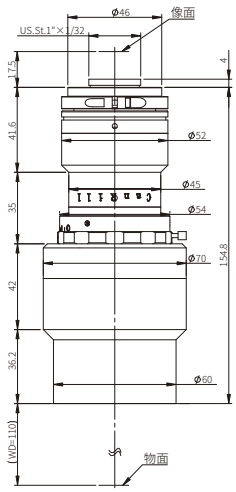

RTLP411G-11

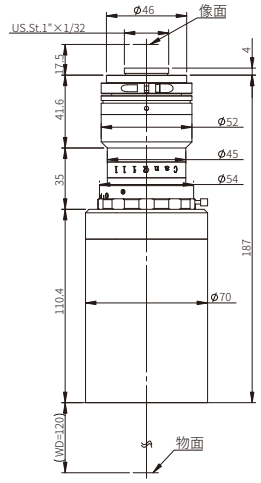

RTLP336G-11

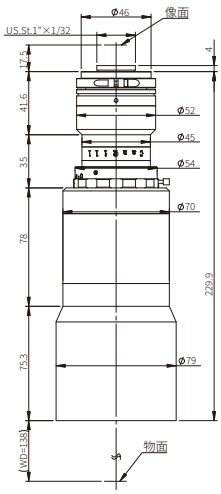

RTLP284-11

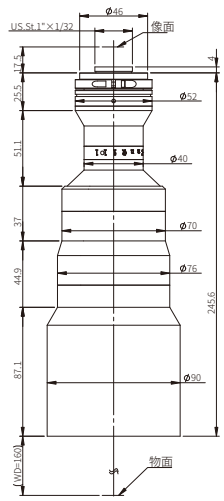

RTLP231-11

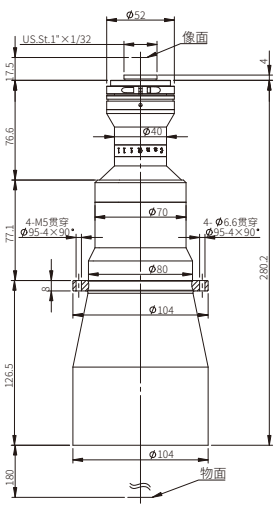

RTLP202-11

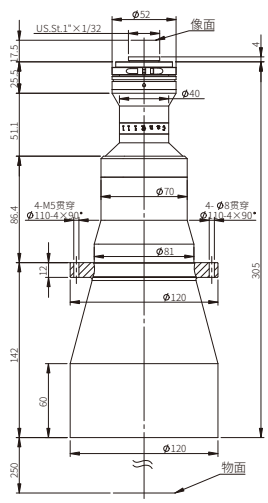

RTLP168-11

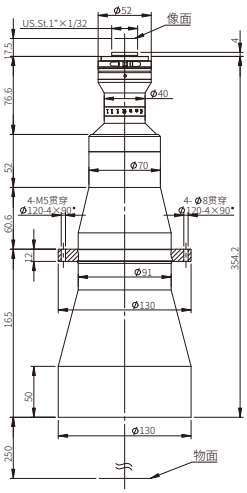

RTLP152-11

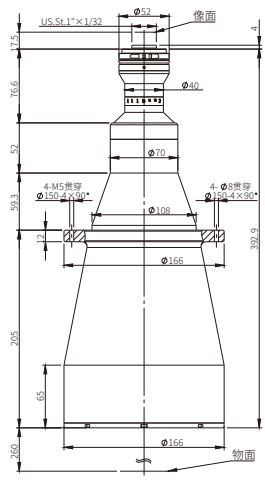

RTLP135-11

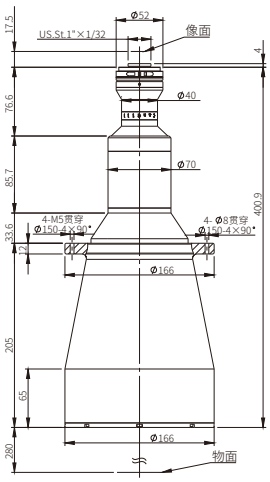

RTLP122-11

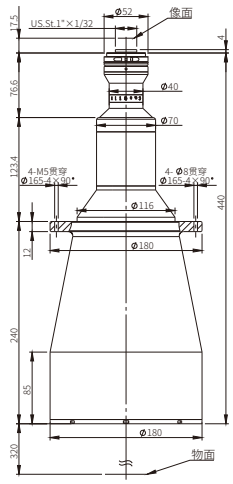

RTLP102-11

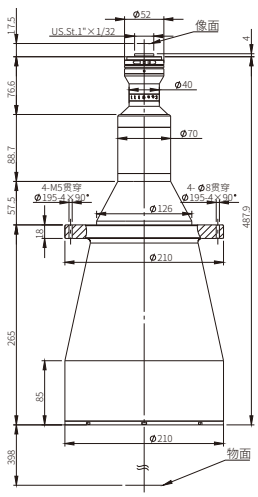

RTLP095-11

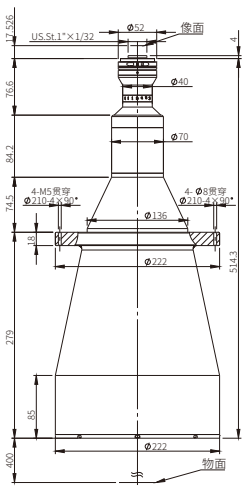

RTLP077-11

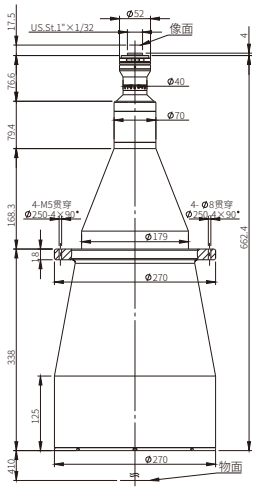

RTLP069-11

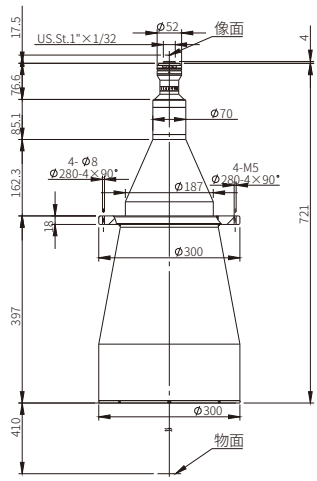

RTLP059-11

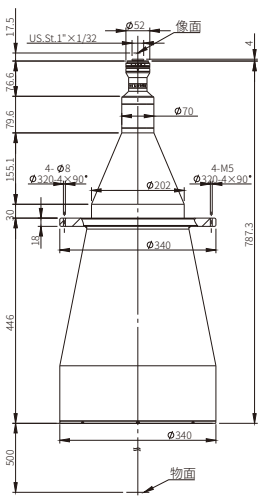

RTLP047-11

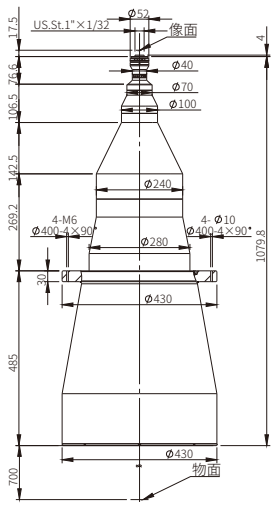

RTLP-43 系列

最高支持 4/3"靶面相机

镜头型号	物方视场 FOV (Φmm)	放大倍率 β(x)	物方工作距 WD(mm)	支持 CCD 尺寸 (Φmm)	像方最佳 F/#	像方 MTF30 (lp/mm)	物方最大景深 DOF(mm)	像方畸变 (% max)	物方远心度 (° max)	物像距 I/O (mm)	镜头总长 (mm)	相机接口
RTLP634G-43	36	0.634	110±2	23.0(4/3")	6.5-45	>80	1.8-12.5	<0.1	<0.1	292±2	182.0	C
RTLP516G-43	44	0.516	120±3	23.0(4/3")	6.5-45	>100	2.7-18.8	<0.1	<0.1	334±3	214.1	C
RTLP422G-43	54	0.422	138±3	23.0(4/3")	6.5-45	>120	4.0-28.0	<0.1	<0.1	395±4	257.1	C
RTLP357G-43	64	0.357	160±3	23.0(4/3")	6.5-45	>130	5.6-39.2	<0.1	<0.1	432±4	272.8	C
RTLP290-43	79	0.290	180±3	23.0(4/3")	8.0	>130	10.5	<0.1	<0.1	487±5	307.4	C
RTLP254-43	90	0.254	250±4	23.0(4/3")	8.0	>140	13.7	<0.1	<0.1	582±5	332.1	C
RTLP211-43	109	0.211	250±4	23.0(4/3")	8.0	>160	19.8	<0.1	<0.1	631±5	381.4	C
RTLP190-43	121	0.190	260±4	23.0(4/3")	8.0	>170	24.4	<0.1	<0.1	680±5	420.0	C
RTLP170-43	135	0.170	280±4	23.0(4/3")	8.0	>180	30.8	<0.1	<0.1	708±6	428.1	C
RTLP153-43	150	0.153	320±5	23.0(4/3")	8.0	>130	37.6	<0.1	<0.1	787±6	467.1	C
RTLP128-43	179	0.128	398±5	23.0(4/3")	8.0	>130	54.1	<0.1	<0.1	913±6	515.0	C
RTLP119-43	193	0.119	400±5	23.0(4/3")	8.0	>150	61.9	<0.1	<0.1	941±6	541.5	C
RTLP097-43	235	0.0976	410±5	23.0(4/3")	8.0	>160	91.5	<0.1	<0.1	1099±5	689.5	C
RTLP086-43	264	0.0868	410±5	23.0(4/3")	8.0	>130	115.5	<0.1	<0.1	1158±5	748.1	C
RTLP075-43	306	0.075	500±6	23.0(4/3")	8.0	>130	155.4	<0.1	<0.1	1314±6	814.5	C
RTLP066-43	346	0.0664	540±6	23.0(4/3")	8.0	>130	196.8	<0.1	<0.1	1426±6	886.7	C
RTLP059-43	385	0.0596	700±6	23.0(4/3")	8.0	>130	244.7	<0.1	<0.1	1807±6	1107.0	C

RTLP634G-43

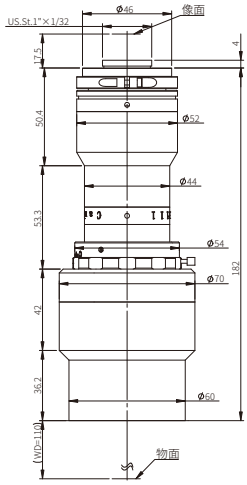

RTLP516G-43

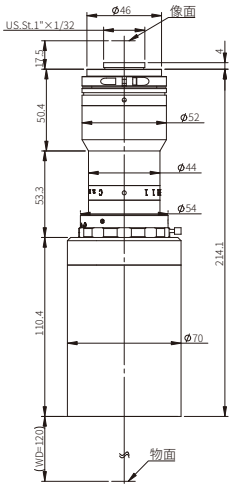

RTLP422G-43

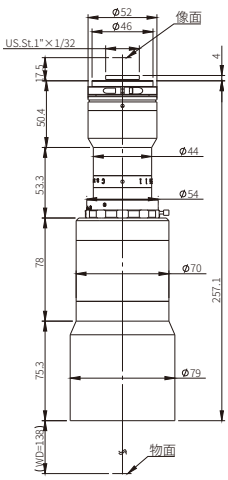

RTLP357G-43

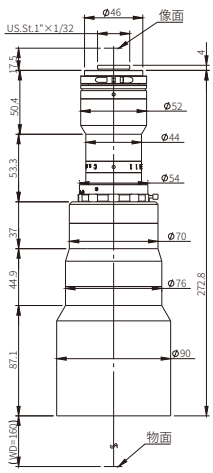

RTLP290-43

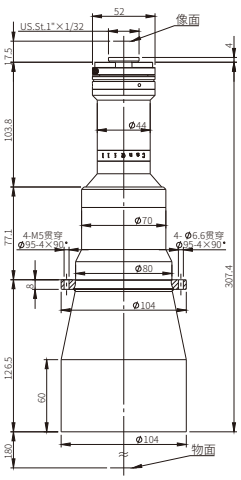

RTLP254-43

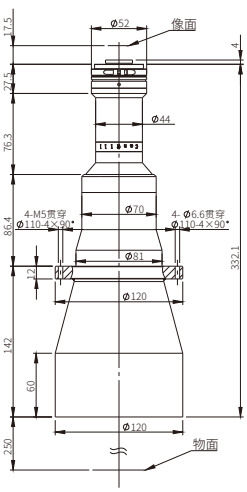

RTLP211-43

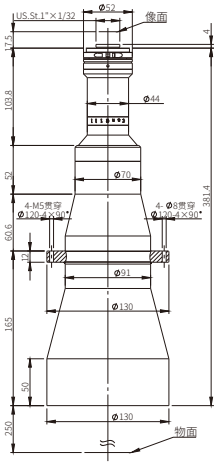

RTLP190-43

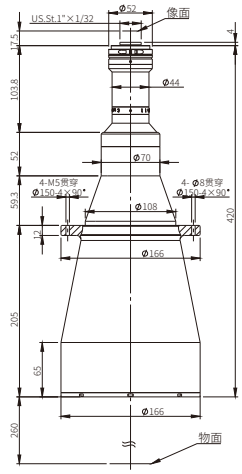

RTLP170-43

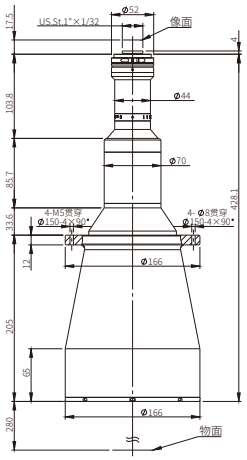

RTLP153-43

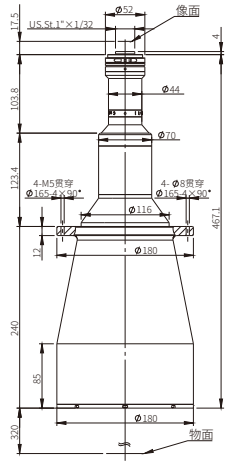

RTLP128-43

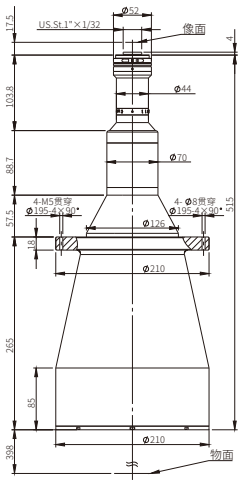

RTLP119-43

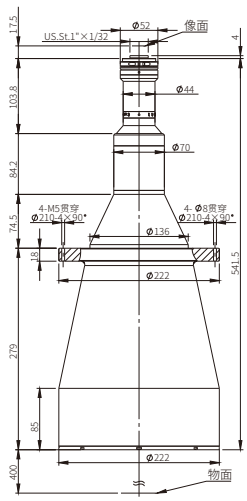

RTLP097-43

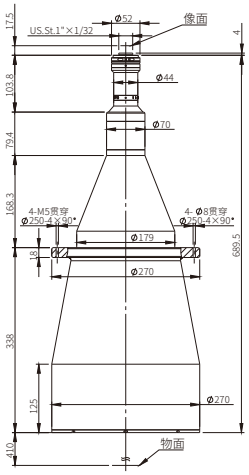

RTLP086-43

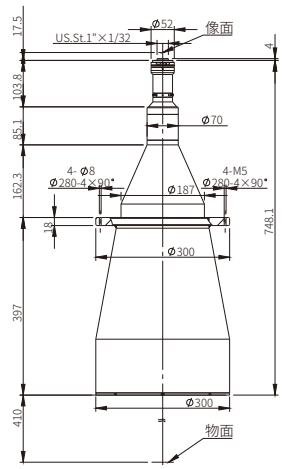

RTLP075-43

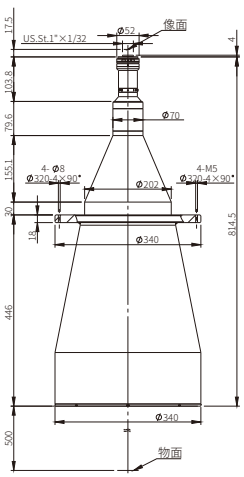

RTLP066-43

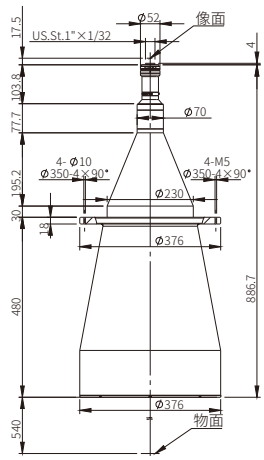

RTLP059-43

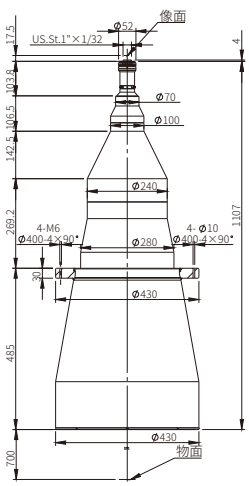

RTLM-1 系列

最高支持 1"靶面相机

镜头型号	物方视场 FOV (Φmm)	放大倍率 β(x)	物方工作距 WD(mm)	支持 CCD 尺寸 (Φmm)	像方最佳 F/#	像方 MTF30 (lp/mm)	物方最大景深 DOF(mm)	像方畸变 (% max)	物方远心度 (° max)	物像距 I/O (mm)	镜头总长 (mm)	相机接口
RTLM800-1	22	0.800	178±3	17.6(1")	10.0	>100	1.7	<0.1	<0.1	333±3	155.7	C
RTLM800C-1	22	0.800	178±3	17.6(1")	10.0	>100	1.7	<0.1	<0.1	333±3	155.7	C
RTLM740-1	23	0.740	65±1	17.6(1")	8.5	>120	1.7	<0.1	<0.1	199±3	134.6	C
RTLM740C-1	23	0.740	65±1	17.6(1")	8.5	>120	1.7	<0.1	<0.1	202±3	137.5	C
RTLM600-1	29	0.600	80±1	17.6(1")	8.0	>125	2.5	<0.1	<0.1	247±2	167.0	C
RTLM600C-1	29	0.600	80±1	17.6(1")	8.0	>125	2.5	<0.1	<0.1	250±3	170.0	C
RTLM550-1	32	0.550	220±4	17.6(1")	8.0	>125	2.9	<0.1	<0.1	437±4	217.6	C
RTLM500-110-1	35	0.500	110±2	17.6(1")	8.0	>125	3.5	<0.1	<0.1	222±2	112.5	C
RTLM500-65-1	35	0.500	65±1	17.6(1")	6.0	>170	2.7	<0.1	<0.1	198±2	133.5	C
RTLM500C-65-1	35	0.500	65±1	17.6(1")	6.0	>170	2.7	<0.1	<0.1	201±3	136.4	C
RTLM500-220-1	35	0.500	220±4	17.6(1")	8.0	>125	3.5	<0.1	<0.1	430±4	210.5	C
RTLM400-1	36	0.400	110±2	16.2(1")	8.0	>125	4.3	<0.1	<0.1	269±3	159.6	C
RTLM367-1	43	0.367	178±2	16(1")	8.0	>125	6.2	<0.1	<0.1	415±4	237.3	C
RTLM350-1	46	0.350	110±2	16.2(1")	8.0	>120	7.0	<0.1	<0.1	275±3	165.4	C
RTLM250-1	64	0.250	178±3	16(1")	8.0	>125	14.0	<0.1	<0.1	390±3	212.8	C
RTLM209-1	77	0.209	178±3	16.2(1")	8.0	>130	20.5	<0.1	<0.1	414±4	236.7	C

RTLM800-1

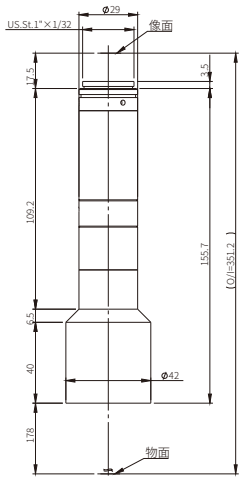

RTLM800C-1

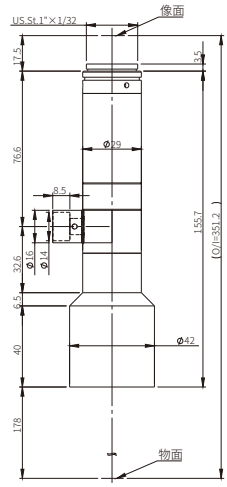

RTLM740-1

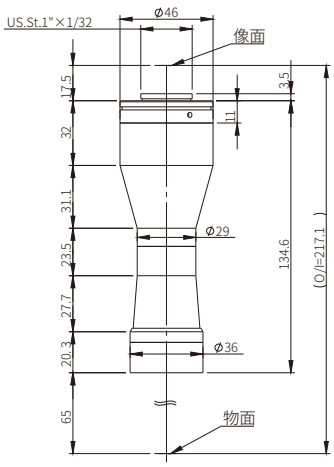

RTLM740C-1

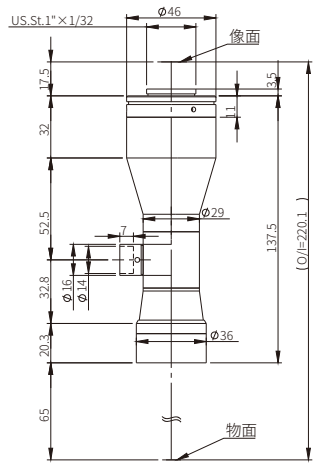

RTLM600-1

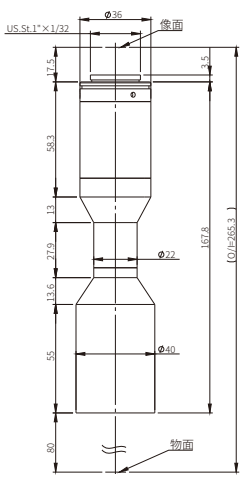

RTLM600C-1

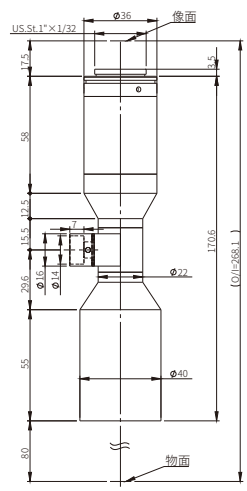

RTLM550-1

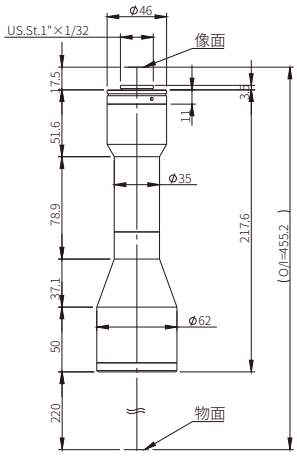

RTLM500-110-1

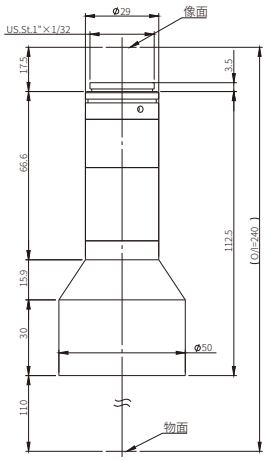

RTLM500-65-1

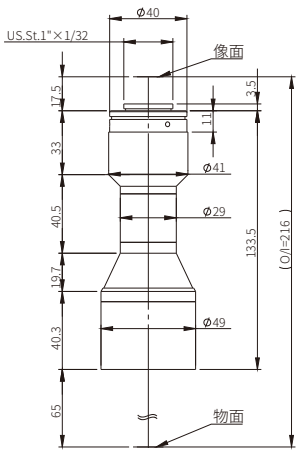

RTLM500C-65-1

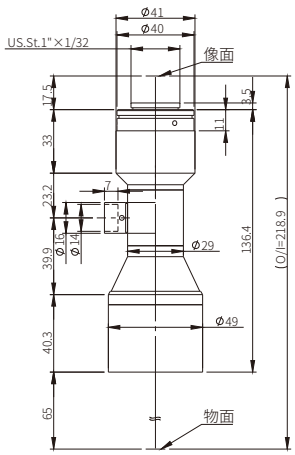

RTLM500-220-1

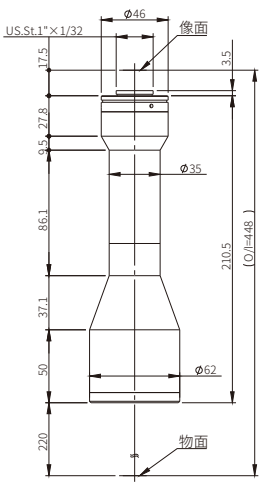

RTLM400-1

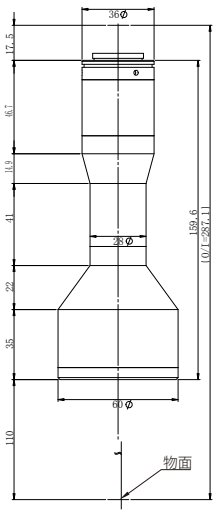

RTLM367-1

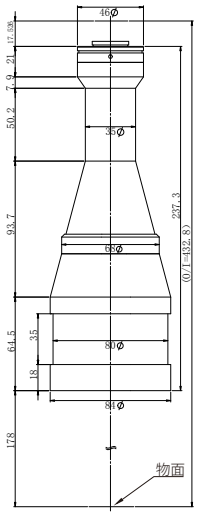

RTLM350-1

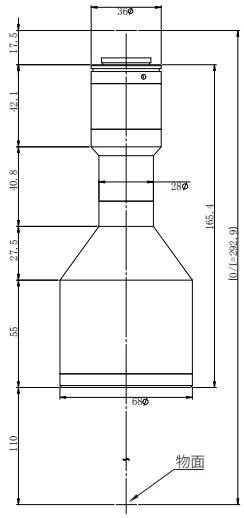

RTLM250-1

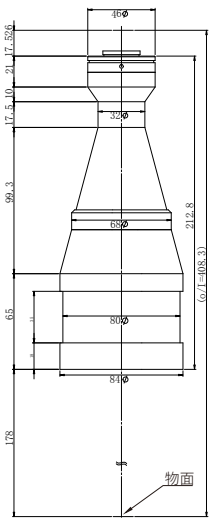

RTLM209-1

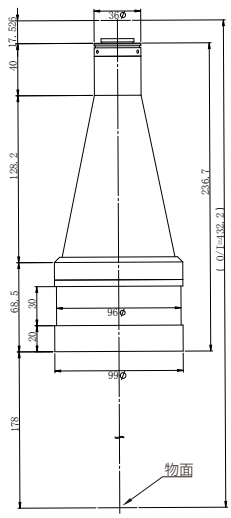

SERVICE TO ENGINEERS

为工程师助力

宇竑智能科技

YU HONG INTELLIGENT TECHNOLOGY